Module 1 — Lesson Plan

Welcome to Amateur Radio

Applicable Chapter: Chapter 1
Suggested Lesson Length: Approximately 1 Hour
Study & Lesson Materials: • *ARRL Ham Radio License Manual* (*HRLM*) 2nd Edition, pages 1-1 through 1-22 • Relevant question pool questions. • Laptop computer and projector • DVD – *Wireless Window on the World* (ham radio promotional video). Obtain from Northeast Ohio Amateur Radio Web page **www.neoham.org** (there is a small fee for this DVD)
Recommended Strategy: • Familiarize yourself as instructor with the ARRL Ham Radio License Support Page on the Web: **www.arrl.org/ham-radio-license-manual**. • Have students introduce themselves and tell why they are interested in ham radio. • Gather background information on your students including occupational skills, other hobbies and special interests and talents. This information will help you capitalize on their skills in facilitating class learning. • Introduce yourself and tell the group why you are qualified to teach the course, including your own experience in the Amateur Radio hobby. Introduce any co-instructors for the course. • Describe the license course and how you will proceed. • Let the group know what you will expect of each of them. • During the session, add testimonials and greetings from a cross-section of local club members – young (under 12-15), mature (over 60), male, female, handicapped, minorities, etc. • Progress checks are embedded in the Lesson Topics so that you may periodically assess student learning and mastery of the Question Pool questions. The “stem” of the actual QP question is indicated as a question to pose to the class, as a group. Vary the students that you call upon to answer the questions as you pose them throughout the lesson. You will be able to monitor and measure learning in this manner.

Module Learning Objectives:

At the conclusion of this lesson, students will be able to:

- Discuss the unique hobby of Amateur Radio and the history of Amateur Radio as a hobby. [T1A01; T1A10]
- Explain the mission and purpose of Amateur Radio according to Part 97 of FCC rules and the role of the ARRL and its mission to support Amateur Radio.
- Discuss the role of the Federal Communications Commission in regulation of the hobby and issuing licenses. [T1A02]
- Identify the various activities in the hobby of ham radio and the role of the Amateur Radio operator in community public safety and service.
- Identify where you can find other hams in your community.
- Discuss the Technician license, the privileges it grants and how to earn it.

Lesson Topics	
Topic	**Notes**
• Introductions.	Introduce yourself and fellow instructors. Have students introduce themselves and state their expectations. PPT Slide 1-2
• Course overview.	PPT Slide 1-3
• Instructor expectations of students.	PPT Slide 1-4
• Introduce the *ARRL Ham Radio License Manual* (*HRLM*) 2nd Edition to the students.	Have *ARRL Ham Radio License Manual* copy available for display.
• Have students follow in the *HRLM* as you introduce the table of contents and each section.	Inform students how to obtain a copy of the *HRLM*.
• Explain the use of the question pool.	Have copy of Question Pool available for display.

• Emphasize the need for students to read the *HRLM* between class sessions.	
• Provide an overview of Amateur Radio as a hobby. If available, show a video of the hobby. See: **www.neoham.org**	PPT Slide 1-5 Show *Wireless Window on the World* to motivate class.
• Beginnings of hobby – beginning of the science of radio-electronics o Today – OSCAR satellites; digital technology; GPS o Hams cannot profit from their pursuits – a hobby only o Assist in local emergencies (hurricanes; tornados) and provide communications for public events and activities o Provide local examples of hams at work helping the community	PPT Slide 1-6
o Anyone, any age, can be a ham – kids to surgeons o Ideal for people with handicaps	Point out variety of ages represented in class.
o Show/view audio public service announcements of ham radio	Locate on ARRL Instructor Resources Web site.
• Discuss and define Amateur Radio and explain the fundamental purposes for the Amateur Radio Service. o What hams do – ▪ Talking ▪ Sending digital data ▪ Sending CW ▪ Building ▪ Watching – SSTV/ATV ▪ Emergency communication, public service, traffic nets ▪ Contests – a practice venue	If possible, do an on-air demonstration of several modes of operation. PPT Slide 1-7
• Discuss the role of the Federal Communications Commission as a regulatory authority.	
o What makes hams “different.”	PPT Slide 1-8
o Amateur Radio is a regulated hobby with personal responsibilities. ▪ Part 97	PPT Slide 1-9
▪ If Internet is available – show **www.fcc.gov** page	Display FCC Web page.

o Amateurs are partners with FCC in regulating hobby ▪ We write and administer or license exams – VEC Program ▪ We police our frequencies – OO Program	 Mention VEC Program and session to be arranged for this class. Mention OO Program.
• Have an official from the local radio club introduce the club as a place where hams come together to share their hobby. o Show ARRL Home Page – **www.arrl.org** ▪ Discuss the mission and purpose of Amateur Radio from Part 97 and how the ARRL supports this role. ▪ Here is an opportunity to explain why membership in ARRL is so important.	Introduce local club official. Log on to the ARRL site from the classroom and show students around. Discuss the benefits of joining the League.
• Discuss the Technician Class license as the first step on the road to the hobby. o The licensing process o License classes o Steps on a ladder – upgrading o Let student know about the Volunteer Examiner (VE) process and where the exams will be offered over the next two months. If a special exam session is planned for this class, let them know when and where.	PPT Slide 1-10 Q & A about ham radio and the licensing process. Establish an Elmer matching of students to club members. PPT Slide 1-11

Progress Check	
Question Stem	**PowerPoint Slide**
1. For whom is the Amateur Radio Service intended? (T1A01)	PPT Slide 1-12
2. What is the FCC Part 97 definition of an amateur station? (T1A10)	PPT Slide 1-14
3. What agency regulates and enforces the rules for the Amateur Radio Service in the United States? (T1A02)	PPT Slide 1-16

Homework Suggestions to Reinforce Lesson Materials:

- Study Module 1 lesson material from *ARRL Ham Radio License Manual* (2nd Edition) pages 1-1 to 1-22 and review test items pertaining to Module 1.
- Read Chapter 2 materials in *ARRL Ham Radio License Manual* (2nd Edition) pages 2-1 to 2-10 in preparation for the next lesson.
- Have student become familiar with local clubs and match each student with an appropriate mentor from local clubs.
- Have student locate Question Pool in Chapter 11 of *HRLM* and the Glossary in Chapter 10 of *HRLM*.
- Study Module 1 lesson material from *ARRL Ham Radio License Manual* (2nd Ed) pages 1-1 to 1-22 and review test items pertaining to Module 1.
- Read Chapter 2 materials in *ARRL Ham Radio License Manual* (2nd Ed) pages 2-1 to 2-10 in preparation for Lesson Module 2.
- Have student become familiar with online practice exams. Students who have recently purchased copies of the *ARRL Ham Radio License Manual* can use the ARRL exam practice software included with the student manual. Others who may have purchased the manual previously or borrowed a copy of an earlier printing can be directed to the various free exam practice sites available on the Web. We provide a list of the some popular ones at: **www.arrl.org/exam-practice**.
- Point students to the resource page on ARRL's Web site at **www.arrl.org/getting-your-technician-license**. This page provides links to the *Ham Radio License Manual* online supplement as well as general information about the Tech license, a link to the exam practice resource page noted above, a resource library and information on locating an exam session.

- The *Ham Radio License Manual* online supplement at **www.arrl.org/ham-radio-license-manual** provides additional study resources, (for example, references for math review), corrections to the book and a downloadable Study Guide with the exam questions organized by the relevant content presentation in the study manual.

- Bring to students' attention the ARRL publication *Getting Started in Ham Radio* by Steve Ford, WB8IMY, available online at **www.arrl.org/arrl-store**.

Question Pool – Applicable Questions to Chapter 1 – *HRLM*:

T1A01; T1A02; T1A10

Module 2 — Lesson Plan

Radio Signals and Waves & Modulation

Applicable Chapter: Chapter 2

Suggested Lesson Length: 2 Hours

Study & Lesson Materials:

- *ARRL Ham Radio License Manual (HRLM)*, 2nd Edition, pages 2-1 through 2-10
- Examples of basic station equipment and materials
- Instructional Modulation Demonstration Board (see ARRL Instructor Resource web page **www.arrl.org/resources-for-license-instruction** under "Instructional Demos" for information about instructional boards employing the Parallax USB Oscilloscope and where to obtain them).
- Band Chart. Obtain printed copies from ARRL (**www.arrl.org/shop/Forms-and-Media-Warehouse**) or download and print from the ARRL Web site at **www.arrl.org/files/file/Hambands_color.pdf**
- Oscilloscope, if possible.
- Electromagnetic field demonstration: Lengths of copper pipe, aluminum pipe and PVC pipe about 3/4 inch diameter. Rare earth magnet. Try **www.gaussboys.com** as a source of magnets. Their number 10 (a 5/8 inch cylinder magnet) should be sufficient diameter to allow the magnet to pass through the pipe. For more instructions how to assemble this project, visit the "Instructional Demos" link found at **www.arrl.org/resources-for-license-instruction**
- Recording of different modes, including digital modes
- Jump rope
- Laptop computer and projector

Recommended Strategy:

- Bring group together for session #2. Re-introduce yourself as instructor (and any co-instructors for the lesson). Open lesson with a statement about radio waves and explain that an understanding of their characteristics is central to this hobby.

- Keep in mind that your class will probably consist of people of varying levels of understanding of physical science. Keep your discussion as basic as possible.

- From the background information on the students that you collected, see if are there any students in the group with a science/technology background who can aid in instructing this lesson (i.e., teaching assistant).

- Perform demonstration experiment: Electromagnetic Field Demo. This is a powerful demonstration that will help your students understand radio waves and perhaps be better able to visualize how radio waves travel. Find a full description on the ARRL Instructor Resource page at **www.arrl.org/resources-for-license-instruction** under "Instructional Demos."

- Demonstrate the basic characteristics of a radio wave by performing the rope demonstration to illustrate frequency, energy and wavelength.

- Use an oscilloscope to demonstrate modulation. If you don't have an oscilloscope, consider acquiring the Modulation Demonstration Board kit developed by ARRL. Designed to be used in combination with the Parallax Oscilloscope, it provides a good visual demonstration of radio waves and modulation/demodulation principles. Refer to the video on the CD supplied with this manual to see how this demonstration board is used in instruction.

- Progress checks are embedded in the Lesson Topics so that you may periodically assess student learning and mastery of the Question Pool questions. The "stem" of the actual QP question is indicated as a question to pose to the class, as a group. Vary the students that you call upon to answer the questions as you pose them throughout the lesson. You will be able to monitor and measure learning in this manner.

Module Learning Objectives

At the conclusion of this lesson, students will be able to:

2.1. Discuss radio signals and waves.
[T3B01; T3B04; T3B05; T3B06; T3B07; T3B08; T3B09; T3B10; T3B11; T5C05; T5C06]

2.2. Discuss modulation.
[T1B09; T2B05; T2B06; T8A01; T8A02; T8A03; T8A04; T8A05; T8A06; T8A07; T8A08; T8A09; T8A10; T8A11]

Lesson Topics

Topic	Notes
Discuss radio signals and waves.	
• Describe the basic radio station. Show examples of equipment – transceiver, mic, handheld with antenna.	PPT Slide 2-2
• Discuss what happens during radio communication and the basics of a radio wave and its travels through space. (T3B01; T3B04; T3B11).	PPT Slides 2-3, 2-4 and 2-5

• Review the vocabulary associated with ac waveforms in particular frequency and amplitude.	
o A radio wave is ac	PPT Slide 2-6
o Define the terms *radio wave*; *frequency oscillation*; *ionization*; *radiation* of radio waves.	PPT Slide 2-7
o Discuss frequency and phase.	
o Discuss cycles per second as a radio signal's frequency.	
o Define *hertz* (Hz) as a unit of frequency measurement. (T5C05).	
o Define *amplitude* and *period*.	
o Discuss how radio waves travel, based on demo.	PPT Slides 2-8 and 2-9 Perform demonstration experiment: Electromagnetic Field Demo
o Define *harmonic* and *fundamental frequency*.	
o Define *spurious emission*.	
• Describe the radio spectrum.	PPT Slide 2-10
o Define *radio frequency* (>20,000 Hz.) (T5C06).	PPT Slide 2-11
o Discuss frequency and depict a radio wave's frequency on the white board or writing chart. (T3B01; T3B05)	
o Define *band* and list the ham bands.	
• Define *wavelength*	
o Discuss wavelength and perform a wavelength calculation for the group. (T3B01; T3B06; T3B07).	PPT Slide 2-12
o Number of cycles per second = frequency.	
o Discuss the fact that radio waves travel at the speed of light (T3B04; T3B11).	
o Emphasize that as frequency increases, wavelength decreases (T3B05).	Perform jump rope demonstration of wavelength and frequency.
o Example 146.52 MHz = 2 meter band (T3B07).	Show band chart as an example.

o Discuss the RF spectrum range. (T3B08; T3B09; T3B10)	PPT Slide 2-13 Administer quiz based on above questions and debrief, or use progress check below.

Progress Check	
Question Stem	**PowerPoint Slide**
1. What is the name for the distance a radio wave travels during one complete cycle? (T3B01)	PPT Slide 2-14
2. How fast does a radio wave travel through free space? (T3B04)	PPT Slide 2-16
3. How does the wavelength of a radio wave relate to its frequency? (T3B05)	PPT Slide 2-18
4. What is the formula for converting frequency to wavelength in meters? (T3B06)	PPT Slide 2-20
5. What property of radio waves is often used to identify the different frequency bands? (T3B07)	PPT Slide 2-22
6. What are the frequency limits of the VHF spectrum? (T3B08)	PPT Slide 2-24
7. What are the frequency limits of the UHF spectrum? (T3B09)	PPT Slide 2-26
8. What frequency range is referred to as HF? (T3B10)	PPT Slide 2-28
9. What is the approximate velocity of a radio wave as it travels through free space? (T3B11)	PPT Slide 2-30
10. What is the unit of frequency? (T5C05)	PPT Slide 2-32
11. What is the abbreviation that refers to radio frequency signals of all types? (T5C06)	PPT Slide 2-34

Lesson Topics	
Topic	**Notes**
So, Where am I? • Review of frequency, wavelength and bands.	PPT Slides 2-36 and 2-37
Discuss the concepts of modulation and demodulation and explain how modulation is used to convey intelligence over the airways. • Modulation is the imprinting of intelligence on a radio wave (carrier wave) so that the intelligence can be sent to a distant location. Demodulation is the extraction of intelligence from a modulated radio wave and creating the sensory stimulus to allow the user to interpret the intelligence (i.e. speaker, computer screen, etc.).	PPT Slide 2-38 Use an oscilloscope or the Modulation Demonstration Board and Parallax Oscilloscope to illustrate the lesson points. See Suggested Activities & Demonstrations for detail. Also see Appendix 1 at the end of this module for more information on using the demonstration board. Watch the video supplied on the CD for more information on how to use this resource.
o Discuss CW as the simplest form of modulation.	PPT Slide 2-39
o Discuss AM signals – two sidebands	PPT Slides 2-40, 2-41 and 2-42
o Discuss single-sideband (SSB) (T8A01).	PPT Slide 2-43
o Discuss frequency and phase modulation (PM) (T2B05; T2B06).	PPT Slide 2-44
o Discuss FM signals and frequency modulation principles. ▪ Discuss phase modulation (PM).	If a station monitor scope and dummy load are available, deliberately set up various modulation scenarios that result in corrupted signals. Show the class the results on the scope and allow them to hear the results on a monitor receiver.
o Discuss care with band edges (T1B09).	Administer quiz based on above questions and debrief.
• Compare types of modulation. o Why use FM signals? (T8A04). o FM and data transmission. (T8A02) o HF and SSB/CW. (T8A05; T8A08-T8A11). o SSB's narrow band advantage in poorer conditions and longer ranges. (T8A03; T8A07).	Play recordings of different modes

o Upper portion of the sideband or lower? Above 10 MHz – USB. (T8A06).	Administer quiz based on above questions and debrief
• Discuss demodulation. o Discuss with the students the process of demodulation and that it is used to extract the intelligence that modulated the carrier wave from the carrier wave. The extracted intelligence is applied to circuits within a radio to interface with the user (speakers, video screens, computers, etc.)	Perform the demodulation demonstration detailed in the suggested activities section.
o Discuss with the students that filters are often used in radio circuits to help eliminate or reduce some of the distortion caused by manipulating wave forms. Though filters are far from perfect, the improvement in the quality of the wave form after filtering is dramatic.	Perform the filtering demonstration detailed in the suggested activities section if time permits.

Progress Check	
Question Stem	**PowerPoint Slide**
1 Why should you not set your transmit frequency to be exactly at the edge of an amateur band or sub-band? (T1B09)	PPT Slide 2-45
2. What determines the amount of deviation of an FM signal? (T2B05)	PPT Slide 2-47
3. What happens when the deviation of an FM transmitter is increased? (T2B06)	PPT Slide 2-49
4. Which of the following is a form of amplitude modulation? (T8A01)	PPT Slide 2-51
5. What type of modulation is most commonly used for VHF packet radio transmission? (T8A02)	PPT Slide 2-53

6. Which type of voice modulation is most often used for long-distance or weak signal contacts on the VHF and UHF bands? (T8A03)	PPT Slide 2-55
7. Which type of modulation is most commonly used for VHF and UHF voice repeaters? (T8A04)	PPT Slide 2-57
8. Which of the following types of emission has the narrowest bandwidth? (T8A05)	PPT Slide 2-59
9. Which sideband is normally used for 10 meter HF, VHF and UHF single-sideband communications? (T8A06)	PPT Slide 2-61
10. What is the primary advantage of single sideband over FM for voice transmissions? (T8A07)	PPT Slide 2-63
11. What is the approximate bandwidth of a single sideband voice signal? (T8A08)	PPT Slide 2-65
12. What is the approximate bandwidth of a VHF repeater FM phone signal? (T8A09)	PPT Slide 2-67
13. What is the typical of analog fast-scan TV transmissions on the 70 cm band? (T8A10)	PPT Slide 2-69
14. What is the approximate maximum bandwidth required to transmit a CW signal? (T8A11)	PPT Slide 2-71

Suggested Activities & Demonstrations:

Perform the modulation demonstration detailed in the suggested activities section to demonstrate amplitude modulation.

Modulation demonstration using the Modulation Demonstration Board and USB Oscilloscope (From WA8SME Lesson Plans).

- Connect one channel of the oscilloscope to TP1 (the audio input) and the other channel to TP2 (the simulated carrier). Power up the board.
- Discuss with the students that the audio wave simulates the modulating intelligence, perhaps your voice. Discuss with the students that the carrier wave in an actual radio would be much higher in frequency and the waveform would appear to be just a blur instead of showing the individual peaks and troughs of the waves. The frequencies used here are for demonstration only and it really isn't a practical carrier wave.
- Draw a representation of the audio and carrier waves on the board.
- Move the oscilloscope channel from TP2 to TP5 which is the output of the modulator. Point out to the students that the amplitude of the carrier wave is changed in step with the peaks and troughs of the audio input wave…this is modulation.

Modulation percentage demonstration (From WA8SME Lesson Plans).

- Vary the amplitude of the audio input wave and note the variation of the percent of modulation, apply some relative percentage values with each step.
- Increase the amplitude of the audio input wave until there is significant distortion in the modulated wave.
- Discuss with the students the symptoms of over modulation and the consequences of over modulation.
- Discuss with the students how to avoid over modulation and corrective actions they can take to correct over modulation.

Demodulation demonstration (From WA8SME Lesson Plans)

- Connect one channel of the oscilloscope to TP5, the output of the modulator. Connect the other channel of the scope to TP6, the output of the demodulator.
- Draw on the board a diode symbol and review with the students the electrical properties of the diode. This demodulator circuit uses a single diode.
- Turn on power to the board and discuss with the students the wave forms being displayed. Make the connection between the properties of a diode and the concept of demodulation.
- Make specific note that the demodulated wave form is only a rough approximation of the modulating audio wave form; spend some time to make sure that each student can see the connection.
- Make specific note that the carrier wave form has been essentially removed by the demodulator, but not quite all of the carrier is removed.

Filtering demonstration (From WA8SME Lesson Plans)

- Move the scope connection from TP5 to TP7 (the filter output).
- Draw on the board the circuit diagram of the filter. Take a moment to simply explain how a filter works.
- Turn on the power to the board and emphasize the difference between the demodulator output before filtering and after filtering. Make specific note that there is still some distortion of the wave form even after filtering.
- Move the scope connection from TP6 to TP1 (audio input) and make necessary scaling adjustments.
- Task the students to compare the audio input wave form to the filtered demodulator output wave form.
- Draw a block diagram of a separated transmitter and receiver on the board. Use this diagram to review the concept of modulation, transmission, reception, and demodulation to bring it all together.

Jump Rope Demonstration

- Describe the basic characteristics of a radio wave. To illustrate that short wavelength, high frequency waves carry more energy than long wavelength, low frequency waves, perform the rope demonstration below to illustrate frequency, energy and wavelength. Select two students to perform this activity. Give each student one end of the rope and have them hold it taut. One student should hold the rope still, while the other student shakes his/her end of the rope up and down at a moderate but steady rate to create a wave pattern. The students will observe the movement of the rope. Point out wave crests. Ask the students to estimate the wavelength and frequency of waves reaching the other student. (Recall: the wavelength is the distance from wave crest to wave crest, while the frequency is the number of waves reaching the far end of the rope each second). Ask the class to describe their observations. What causes the wave to travel down the rope? Tell the student who is shaking the rope to shake the rope faster. Then tell the student to shake the rope slower. Again, point out the wave crests to the class. Have them estimate the wavelength and the frequency. What happens to the wavelength of rope waves when the rope was shaken faster? Ask the class to describe how each term relates to the demonstration. Ask the student who shook the rope if it took more energy to produce long wavelength waves (low frequency) or short wavelength waves (high frequency). (umanitoba.ca).
- Develop one or more practice tests using the Question Bank for this lesson. Allow students to take test after you complete lecture portion of lesson, above. Go over each test, as a group, using question answers as material to reinforce previous lecture.
- Match students and volunteer mentors (Elmers).
- Suggest that students and Elmers get together between class sessions to reinforce material and for students to see hobby in action in Elmer's shack.
- For an animated discussion of the relationship between frequency and wavelength, go to web site and review: **www.isvr.soton.ac.uk/SPCG/Tutorial/Tutorial/Tutorial_files/Web-basics-frequency.htm**

Homework Suggestions to Reinforce Lesson Materials:

- Study Module 2 lesson material from *ARRL Ham Radio License Manual* (2nd Edition) pages 2-1 to 2-10 and review test items pertaining to Module 2.
- Read remaining Chapter 2 materials in *ARRL Ham Radio License Manual* (2nd Edition) pages 2-11 to 2-13 in preparation for the next lesson.
- Introduce students to the book *Basic Radio*, by Joel Hallas, W1ZR, available through the ARRL Bookstore.

Question Pool – Applicable Questions to Chapter 2 – *HRLM*:

Module 2
T1B09; T2B05; T2B06; T3B01; T3B04; T3B05; T3B06; T3B07; T3B08; T3B09; T3B10; T3B11; T5C05; T5C06; T8A01; T8A02; T8A03; T8A04; T8A05; T8A06; T8A07; T8A08; T8A09; T8A10; T8A11

Appendix 1

Wave Fundamentals and Modulation Demonstration Board

(from WA8SME Lesson Plans)

Purpose: The purpose of this board is to give the instructor a ready instructional resource to support lesson presentations in wave fundamentals and modulation. The board would be used in conjunction with a projection capable oscilloscope and an external audio amplifier during platform instruction of the concepts.

During the wave fundamentals lesson, the board produced audio waveform frequency and amplitude are manipulated to reinforce the relationship between frequency, wavelength, and pitch and to reinforce the independence of amplitude and frequency. The audio is fed into the external amplifier to provide audio presentation while the waveform is visually displayed on the oscilloscope.

During the modulation lesson, a simulated carrier wave is modulated by the audio wave using amplitude modulation. The input and output waveforms are displayed by the oscilloscope so that comparisons can be made as the waveforms are manipulated. The audio wave's frequency and amplitude are manipulated to show the effects of varying modulation percentages and over modulation.

During the demodulation lesson, the modulated carrier is fed into a demodulator circuit. The input modulated waveform, original audio waveform, demodulator output, and filtered output waveforms are displayed sequentially on the oscilloscope to allow the instructor to walk the students through the demodulation process.

Circuit Diagram: This the circuit diagram of the board:

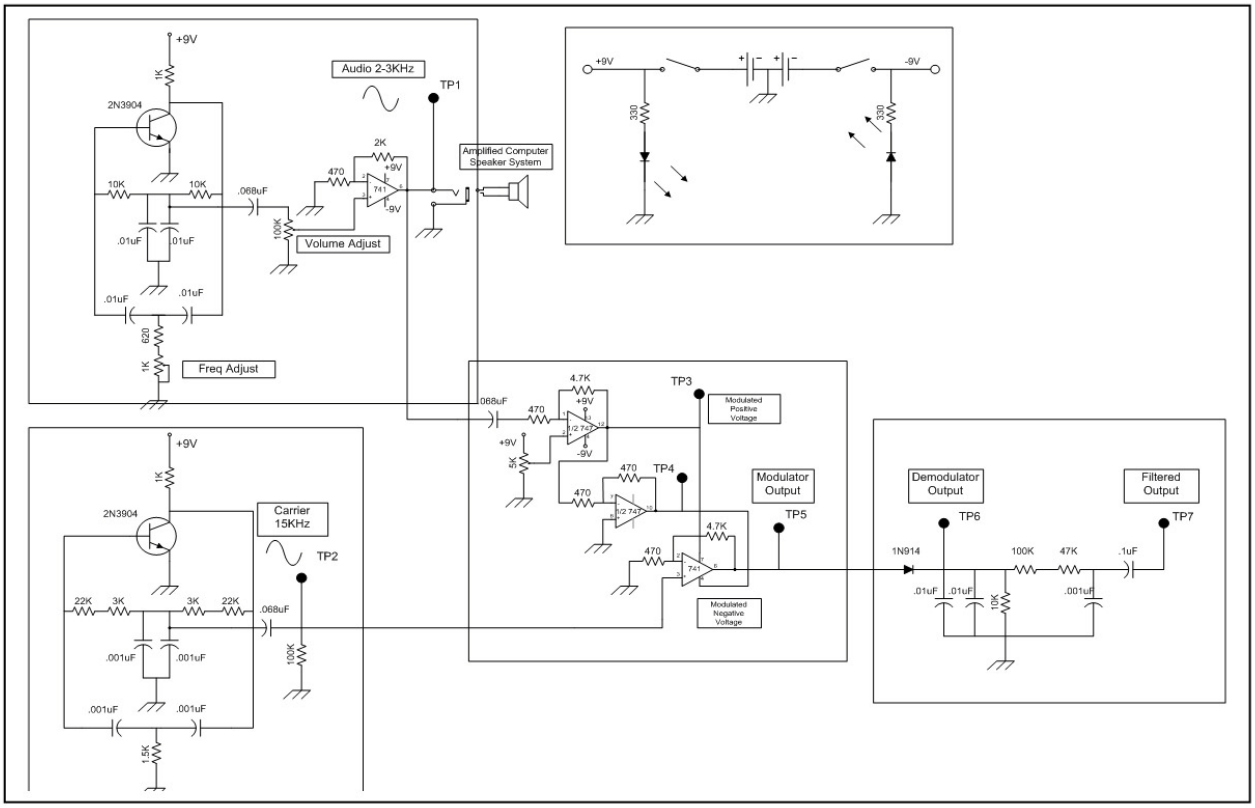

Circuit Board: This is what the board looks like:

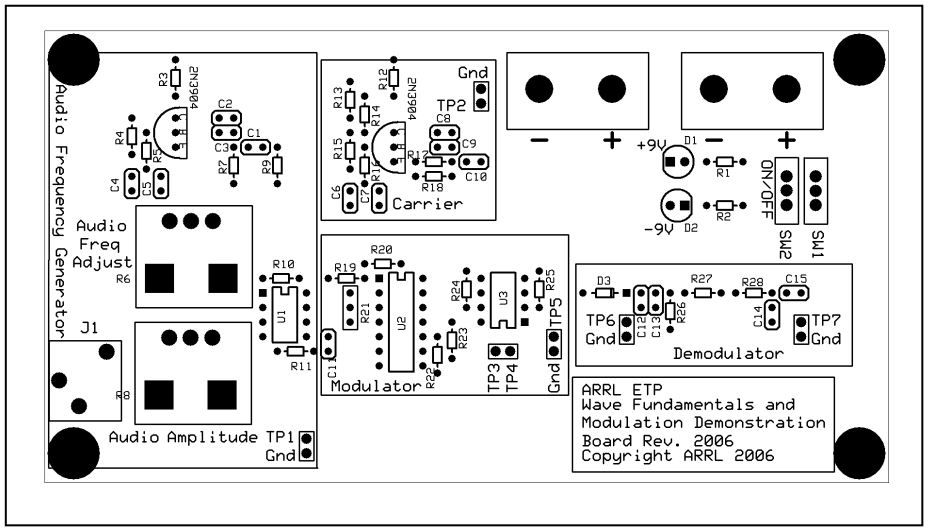

Lesson Examples

(from WA8SME Lesson Plans)

Wave Fundamentals: The instructor would begin the lessons by presentation the vocabulary of waveforms so that students will be able to understand the subsequent lessons on modulation where that vocabulary is used. The instructor would connect the oscilloscope to TP1 to display the audio waveform and connect a computer speaker amplifier to J1 to provide sufficient audio levels to be heard by the students. The projected display would look like this:

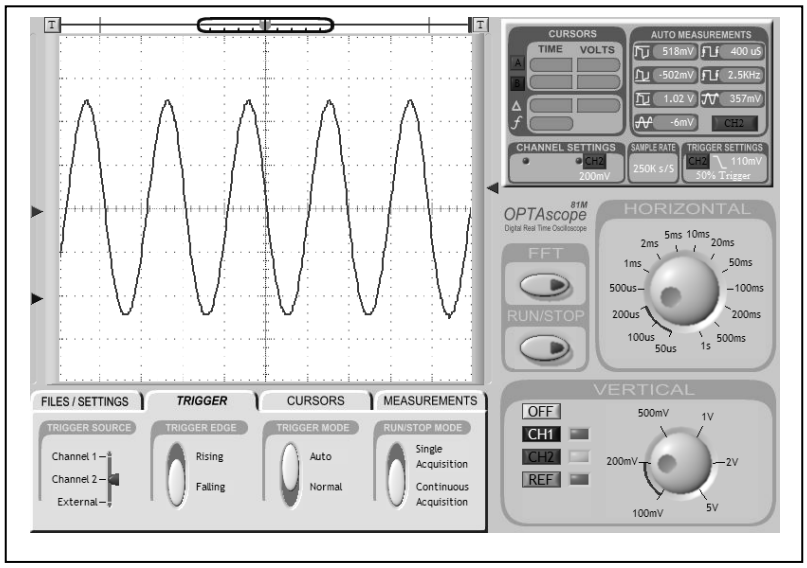

The instructor would use this screen to illustrate the vocabulary used to describe a waveform (crest, trough, wavelength, frequency, period, amplitude). Then the frequency is changed through the range by adjusting R6. The frequency range is between approximately 2 and 3 Kilo Hertz. During this portion of the demonstration, the instructor would emphasize the relationship between frequency and pitch. Next, the instructor would emphasize the inverse relationship between frequency and wavelength. Finally, the instructor would vary the amplitude of the wave using R8. During this portion of the demonstration, the instructor would emphasize the relationship between amplitude and loudness (strength) of the wave while pointing out the independence of amplitude and frequency.

Modulation: The instructor would begin the modulation demonstration by providing some background material on the concept of modulation. The board and oscilloscope would be set up by connecting one channel of the scope to TP1 and the other channel to TP2. The scope display would be as depicted below. The red trace simulated a radio frequency carrier wave; the blue trace represents the audio to be imbedded on the carrier wave during modulation.

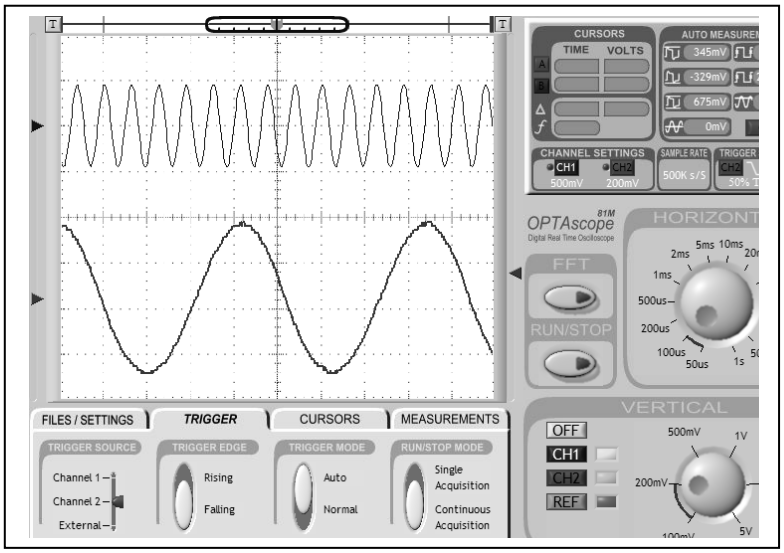

Next, one channel of the scope is moved from the carrier on TP2 to the demodulator output on TP5. The demodulator output is display in this example in blue. The instructor uses this waveform to illustrate the concept of amplitude modulation…the amplitude of the carrier wave is varied in step with the amplitude of the audio wave being imprinted on the carrier.

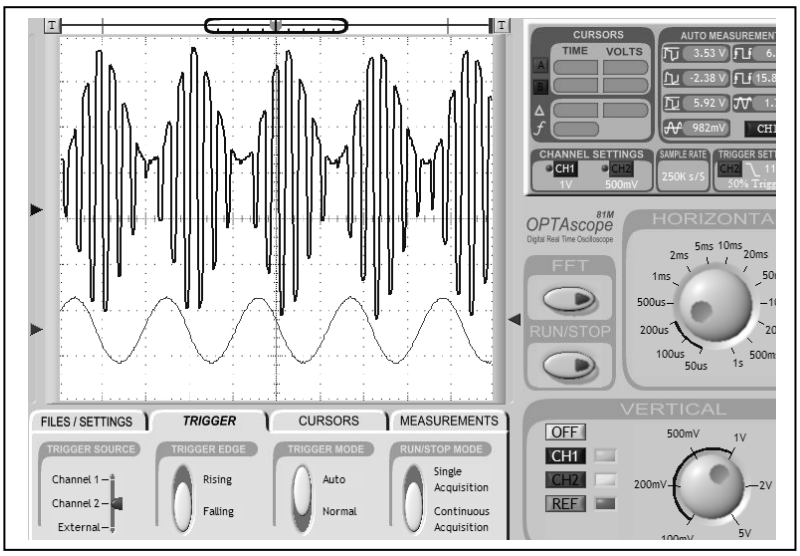

The concept of amplitude modulation is further reinforced by varying the amplitude of the audio wave using the R8 control. The following panels show approximate levels of 50%, 25%, and 0% modulation:

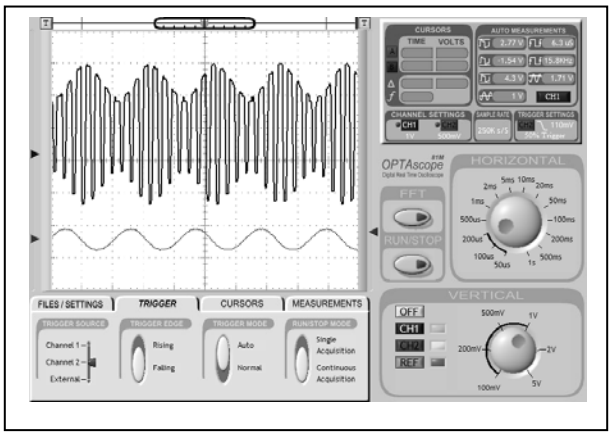

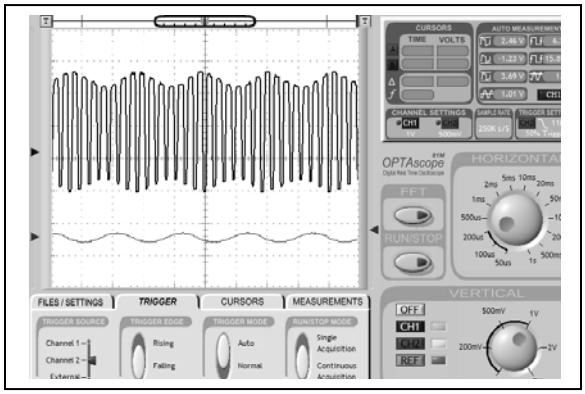

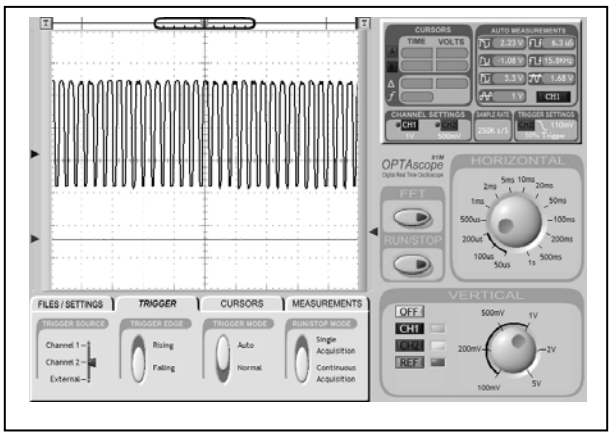

The instructor can next demonstrate the concept of over modulation by increasing the audio wave amplitude beyond the 100% modulation level. Varying amounts of distortion become evident as the modulation level goes beyond 100%.

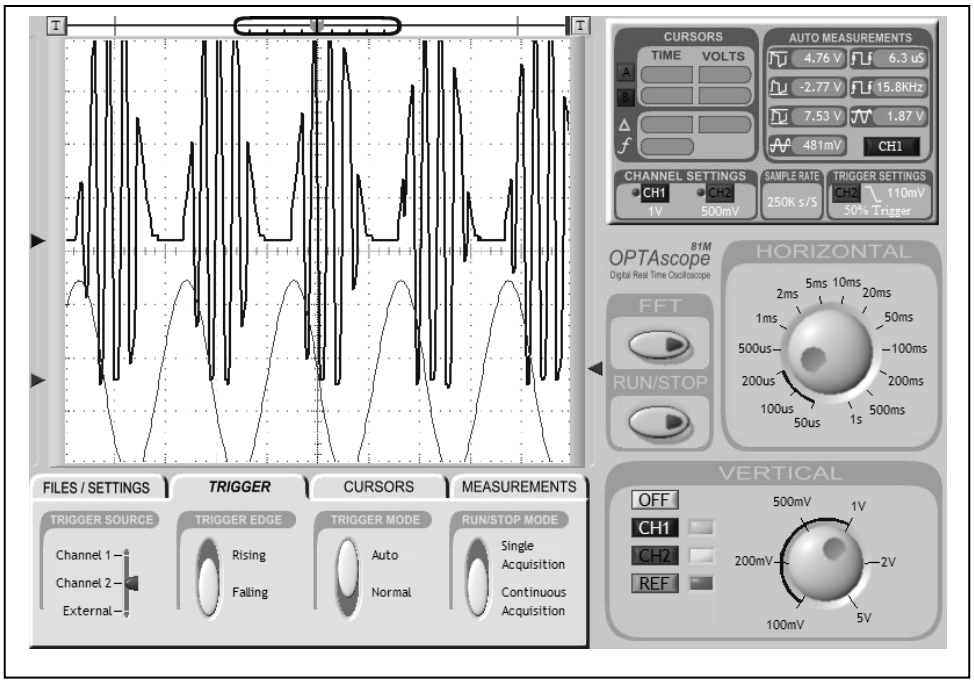

Here the student can see the amplitude of the audio wave increase and at beyond a certain point (100% modulation), the carrier waveform becomes distorted (flat topping) and no longer faithfully follows the audio waveform.

Demodulation: The instructor would begin the demodulation demonstration by providing some background material on the concept of demodulation. The demodulation demonstration is set up by configuring the board for 100% modulation and connecting one channel of the scope to the audio waveform at TP1 and the other channel the output of the demodulator at TP6. TP6 is connected to a simple diode rectifier that is used to demodulate the AM waveform. The display will look like this:

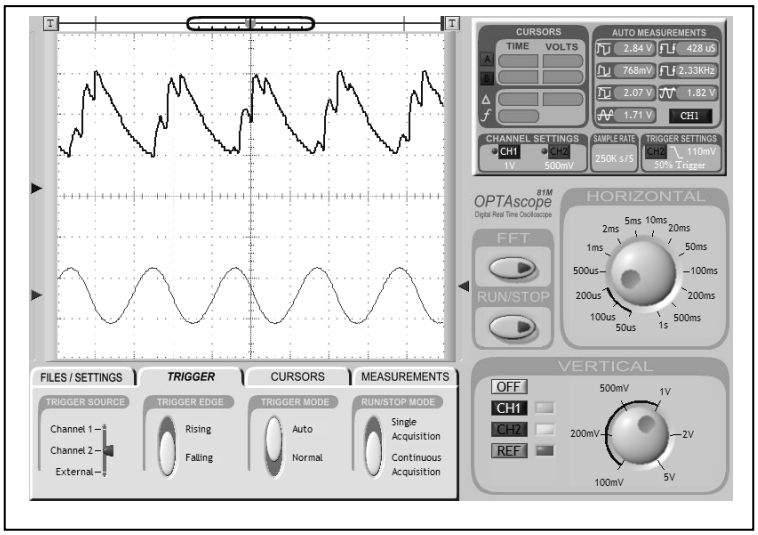

The instructor can use this display to illustrate that the carrier waveform has been modified by the demodulator (the AC component has been eliminated and a DC wave is the result). The instructor can also point out that there are still some remnants of the carrier wave still present that corrupts the desired audio waveform.

The board is next configured with one scope channel connected to the filter output at TP7. The display would look like this:

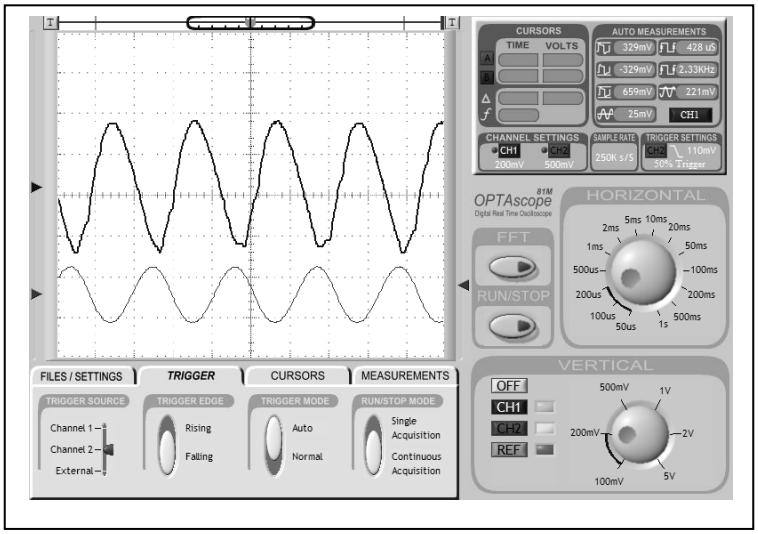

Using this display the instructor would point out that filter has removed virtually all of the remnants of the carrier that remained after demodulation and that the audio output is a fair duplication of the original audio waveform. This is a good opportunity for the instructor to point out that the modulation/demodulation process is not perfect and that there is always going to be some distortion of the audio waveform during the process due to the imperfections of electronic circuitry.

Module 3 — Lesson Plan

Radio Equipment Basics

Applicable Chapter: Chapter 2
Suggested Lesson Length: 3/4 Hour
Study & Lesson Materials: • *ARRL Ham Radio License Manual (HRLM)* 2nd Edition, pages 2-11 through 2-13. • Examples of basic station equipment and accessories discussed in this module • Laptop computer and projector • "Five Building Blocks of Radio" demonstration board (see ARRL Instructor Resource Web page **www.arrl.org/resources-for-license-instruction** under "Instructional Demos" for information about instructional boards employing the Parallax USB Oscilloscope and where to obtain them).
Recommended Strategy: • Bring group together for session #3. Introduce any co-instructors for the lesson. • Keep in mind that your class will probably consist of people of varying levels of understanding of physical science. Keep your discussion as basic as possible. • From the background information on the students that you collected, see if are there any students in the group with a science/technology background who can aid in instructing this lesson (i.e., teaching assistant). • Consider acquiring the "Five Building Blocks of Radio" demonstration kit developed by ARRL. It provides a good visual demonstration of each of the component blocks of electronics, providing a good foundation for understanding radio. If you don't have an oscilloscope, consider acquiring the "Modulation Demonstration Board" kit developed by ARRL. Designed to be used in combination with the Parallax USB Oscilloscope, it provides a good visual demonstration of radio waves and modulation – demodulation principles. Refer to the video on the CD supplied with this manual to see how this demonstration board is used in instruction. • Progress checks are embedded in the Lesson Topics so that you may periodically assess student learning and mastery of the Question Pool questions. The "stem" of the actual QP question is indicated as a question to pose to the class, as a group. Vary the students that you call upon to answer the questions as you pose them throughout the lesson. You will be able to monitor and measure learning in this manner.

Module Learning Objectives

At the conclusion of this lesson, students will be able to:

2.3. Discuss radio equipment basics.
[T1F09; T4A02; T7A07]

Lesson Topics	
Topic	**Notes**
2.3. Discuss radio equipment basics including repeaters.	
• Describe the basic radio station. Explain that electronic components are arranged to manipulate current flow to accomplish five basic tasks: oscillation, rectification, amplification, mixing and filtering.	PPT Slides 3-2 and 3-3 Use the Five Building Blocks of Radio Demonstration Board to illustrate the lesson points.
• Describe the basic function of each block.	
• Discuss repeaters and demonstrate a local repeater's operation (T1F09).	PPT Slides 3-4, 3-5 and 3-6

• Amateur Radio equipment and basic station accessories
  o Power supplies
  o Keys
  o Headphones
  ▪ Benefits of headphones. (T4A02).
	PPT Slides 3-7 and 3-8
	
	Show examples of station equipment and accessories

• Discuss the function of a transmit-receive (TR) switch. (T7A07)	

Progress Check	
Question Stem	**PowerPoint Slide**
1. What type of amateur station simultaneously retransmits the signal of another amateur station on a different channel or channels? (T1F09)	PPT Slide 3-9
2. What could be used in place of a regular speaker to help you copy signals in a noisy area? (T4A02)	PPT Slide 3-11
3. If Figure T5 represents a transceiver in which block 1 is the transmitter portion and block 3 is the receiver portion, what is the function of block 2? (T7A07)	PPT Slide 3-13

Homework Suggestions to Reinforce Lesson Materials:

- Study lesson material from *Ham Radio License Manual* (2nd Edition) pages 2-11 to 2-13 and review test items pertaining to Module 3.
- Re-read *ARRL Ham Radio License Manual* (2nd Edition) Chapter 2, pages 2-1 and 2-2 and read *HRLM* Chapter 3 in pages 3-1 to 3-6 in preparation for the next lesson.
- Introduce students to the book *Basic Radio*, by Joel Hallas, W1ZR, available through the ARRL Bookstore.

Question Pool – Applicable Questions to Chapter 2 – *HRLM*:

Module 2
T1B09; T2B05; T2B06; T3B01; T3B04; T3B05; T3B06; T3B07; T3B08; T3B09; T3B10; T3B11; T5C05; T5C06; T8A01; T8A02; T8A03; T8A04; T8A05; T8A06; T8A07; T8A08; T8A09; T8A10; T8A11

Module 3
T1F09; T4A02; T7A07

Module 4 – Lesson Plan

Math Review

Applicable Chapter: Chapters 2 and 3
Suggested Lesson Length: 3 Hours
Study & Lesson Materials: • *ARRL Ham Radio License Manual (HRLM)* 2nd Edition, pages 2-1 to 2-2 and 3-1 to 3-6. • Laptop computer and projector • See ARRL Web – Tech Prep Resource Library for additional math review resources **www.arrl.org/tech-prep-resource-library**
Recommended Strategy: • Bring group together for session #4. Introduce any co-instructors for the lesson. • Keep in mind that your class will probably consist of people of varying levels of understanding of physical science. Keep your discussion as basic as possible. • From the background information on the students that you collected, see if are there any students in the group with a science/technology background who can aid in instructing this lesson (i.e., teaching assistant). • Progress checks are embedded in the Lesson Topics so that you may periodically assess student learning and mastery of the Question Pool questions. The “stem” of the actual QP question is indicated as a question to pose to the class, as a group. Vary the students that you call upon to answer the questions as you pose them throughout the lesson. You will be able to monitor and measure learning in this manner.

Module Learning Objectives:

At the conclusion of this lesson, students will be able to:

- Apply basic math principles related to metrics and decimals.
  [T5B01; T5B02; T5B03; T5B04; T5B05; T5B06; T5B07; T5B08]
- Apply basic Ohm’s Law problems
  [T5D01; T5D02; T5D03; T5D04; T5D05; T5D06; T5D07; T5D08; T5D09; T5D10; T5D11; T5D12]
- Apply the power formula. [T5C09; T5C10; T5C11]

Lesson Topics	
Topic	**Notes**
• Discuss metric units (T5B02; T5B07). o Meters; kilo (k); centi (c); milli (m); mega (M); giga (G).	PPT Slide 4-2
• Practice math for electronics. (T5B01; T5B03; T5B04; T5B05; T5B06; T5B08). o Solve basic math problems using Ohm's Law including decimal values for voltage (E), current (I), and resistance (R).	PPT Slide 4-3

Progress Check	
Question Stem	**PowerPoint Slide**
1. What is another way to specify a radio signal frequency of 1,500,000 hertz? (T5B02)	PPT Slide 4-4
2. If a frequency readout calibrated in megahertz shows a reading of 3.525 MHz, what would it show if it were calibrated in kilohertz? (T5B07)	PPT Slide 4-6
3. How many milliamperes is 1.5 amperes? (T5B01)	PPT Slide 4-8
4. How many volts are equal to one kilovolt? (T5B03)	PPT Slide 4-10
5. How Many volts are equal to one microvolt? (T5B04)	PPT Slide 4-12
6. Which of the following is equivalent to 500 milliwatts? (T5B05)	PPT Slide 4-14
7. If an ammeter calibrated in amperes is used to measure a 3000-milliampere current, what reading would it show? (T5B06)	PPT Slide 4-16
8. How many microfarads are 1,000,000 picofarads? (T5B08)	PPT Slide 4-18

Lesson Topics	
Topic	**Notes**

• Using small groups, assign each group a series of problems. Allow each group to present their findings to the full class.
  o Discuss and apply Ohm's Law given two of the three – I, E, R (T5D01; T5D02; T5D03).
  o Practice with the following questions (T5D04 to T5D12).
	PPT Slide 4-20

• Likewise present the power formula and solve in its three forms. o Solve the following questions as examples of the power formula (T5C09; T5C10; T5C11)	PPT Slide 4-21

Progress Check	
Question Stem	**PowerPoint Slide**
1. What formula is used to calculate current in a circuit? (T5D01)	PPT Slide 4-22
2. What formula is used to calculate voltage in a circuit? (T5D02)	PPT Slide 4-24
3. What formula is used to calculate resistance in a circuit? (T5D03)	PPT Slide 4-26
4. How much power is being used in a circuit when the applied voltage is 13.8 volts DC and the current is 10 amperes? (T5C09)	PPT Slide 4-28
5. How much power is being used in a circuit when the applied voltage is 12 volts DC and the current is 2.5 amperes? (T5C10)	PPT Slide 4-30
6. How many amperes are flowing in a circuit when the applied voltage is 12 volts DC and the load is 120 watts? (T5C11)	PPT Slide 4-32

Suggested Activities and Demonstrations:

- Develop one or more practice tests using the question bank for this lesson. Allow students to take test after you complete lecture portion of lesson, above. Go over each test, as a group, using question answers as material to reinforce previous lecture.
- Match students and volunteer mentors (Elmers).
- Suggest that students and Elmers get together between class sessions to reinforce material and for students to see hobby in action in Elmer's shack.

Homework Suggestions to Reinforce Lesson Materials:

- Study lesson material from *ARRL Ham Radio License Manual* (2nd Edition) pages 2-1 to 2-2 and 3-1 to 3-6 and review test items pertaining to Module 3.
- Re-read Chapter 3 in *ARRL Ham Radio License Manual* (2nd Edition) pages 3-1 to 3-6 in preparation for the next lesson.

Question Pool – Applicable Questions to Chapters 2 and 3 – *HRLM*:

Module 2, Chapter 2
T1B09; T2B05; T2B06; T3B01; T3B04; T3B05; T3B06; T3B07; T3B08; T3B09; T3B10; T3B11; T5C05; T5C06; T8A01; T8A02; T8A03; T8A04; T8A05; T8A06; T8A07; T8A08; T8A09; T8A10; T8A11

Module 3, Chapter 2
T1F09; T4A02; T7A07

Module 4, Chapter 2
T5B01; T5B02; T5B03; T5B04; T5B05; T5B06; T5B07; T5B08

Module 4, Chapter 3
T5C09; T5C10; T5C11; T5D01; T5D02; T5D03; T5D04; T5D05; T5D06; T5D07; T5D08; T5D09; T5D10; T5D11; T5D12

Module 5 – Lesson Plan

Electricity

Applicable Chapter: Chapter 3
Suggested Lesson Length: 1½ Hours
Study & Lesson Materials: • *ARRL Ham Radio License Manual* (*HRLM*) 2nd Edition, pages 3-1 to 3-6. • A multimeter (if possible have multiples on hand for students to use). • An ammeter for current measurements should be available. • Prepare a series and parallel circuit light board for demonstration. • Examples of resistors, conductors and insulators.
Recommended Strategy: • Introduce any other instructors that will join you for Module 5. • Keep in mind that your class will probably consist of people of varying ages and thus, varying levels of understanding of physical science. Keep your discussion as basic as possible. Pass around the various components and parts so that students can hold and touch them. For many, it will be the first time they have held a resistor or capacitor, etc. • From the background information on the students that you collected, see if are there any students in the group with a science/technology background who can aid in instructing this lesson (i.e., teaching assistant). • Discuss the overview of this lesson. Emphasize that the Technician class license requires a fundamental knowledge of electronics, but not an in-depth competency in the subject. Keep in mind that the student make-up of your class will be varied, both in age and educational level. Keep it simple. • Progress checks are embedded in the Lesson Topics so that you may periodically assess student learning and mastery of the Question Pool questions. The “stem” of the actual QP question is indicated as a question to pose to the class, as a group. Vary the students that you call upon to answer the questions as you pose them throughout the lesson. You will be able to monitor and measure learning in this manner. • Develop several versions of sample tests from the question pool for this chapter. These will be used during class for practice.

Module Learning Objectives:

At the conclusion of this lesson, students will be able to:

3.1. Discuss the fundamental concepts and principles of electricity.

[T3B02; T5A01; T5A02; T5A03; T5A04; T5A05; T5A07; T5A08; T5A09; T5A10; T5A11; T5C08; T5C09; T5C10; T5C11; T5D01; T5D02; T5D03; T7D01; T7D02; T7D03; T7D04; T7D05; T7D06; T7D07; T7D10; T7D11]

Lesson Topics	
Topic	**Notes**
Discuss the fundamental concepts and principles of electricity.	PPT Slide 5-2
• Review atomic structure and focus on electrons, protons, ions, and band strengths. Avoid spending too much time on anything more than electrons, electric charge and the basic atom. Describe the response of electrons to an electric potential.	PPT Slide 5-3
Electricity: Three basic characteristics:	PPT Slide 5-4
Discuss voltage and current. • Electric current (I) is the flow of electrons. (T5A03). Use the analogy of water flowing through a hose. Pressure flow; hose surface posing resistance; water volume. • Current is measured in amperes (A) (T5A01).	PPT Slides 5-5 and 5-6
• An ammeter is used to measure current (T7D04). • Voltage or electromotive force is the force that makes electrons move (T5A05). • Voltage is measured in volts (V) (T5A11). • Voltage is measured with a voltmeter (T7D01). • Voltmeters are connected in parallel with a component to measure voltage (T7D02).	Show voltmeter and ammeter and demonstrate measurements

• Ammeters are connected in series with a component to measure current flow (T7D03).	
Discuss circuits.	
• Construct a simple series and parallel light circuit board to illustrate concepts. Demonstrate an ohmmeter to highlight Ohm's Law calculations.	Demonstrate parallel and series circuits with prepared boards PPT Slides 5-7 to 5-10
• Discuss multimeters or VOMs.	
• Demonstrate a multimeter and underscore safety and its proper use to avoid damage to the instrument. (T7D06; T7D07; T7D10; T7D11).	Have students try making some measurements
Discuss resistance.	
• Electrical resistance is represented by the symbol (R)	Show various types and sizes and power rating of resistors. Pass them around.
• Resistance is measured in ohms (T7D05).	
• Current flowing through resistors produces heat.	
• Materials that permit electricity to flow easily, such as copper are called conductors (T5A07).	Show examples of conductors and insulators
• Materials that impede the flow of electrons, such as glass, plastic, are called insulators (T5A08).	
• Discuss and apply Ohm's Law – given two of the three – I, E, R (T5D01; T5D02; T5D03).	Administer short quiz based on above questions and debrief
Discuss power.	
• Power is represented by the symbol, P, and is measured in watts (T5A02).	PPT Slide 5-11
• Power is the rate at which electrical energy is used (T5A10).	
• Power is calculated as the product of voltage (E) and current (I) (T5C08).	PPT Slide 5-12
• Solve the following questions as examples of the power formula (T5C09; T5C10; T5C11).	

Discuss ac and dc. • Electrical current takes different forms. • Current that flows in one direction only is called direct current (dc) (T5A04). • Current that reverses direction is alternating current (ac) (T5A09). • Likewise voltages follow = ac voltage/dc voltage. • A complete cycle of ac current flowing, stopping, reversing and stopping is called one cycle. The number of cycles per second is the ac current's frequency (T3B02).	PPT Slide 5-13 Practice with the following questions

Progress Check	
Question Stem	**PowerPoint Slide**
1 What term describes the number of times per second that an alternating current reverses direction? (T3B02)	PPT Slide 5-14
2. Electrical current is measured in which of the following units? (T5A01)	PPT Slide 5-16
3. Electrical power is measured in which of the following units? (T5A02)	PPT Slide 5-18
4. What is the name for the flow of electrons in an electric circuit? (T5A03)	PPT Slide 5-20
5. What is the name for a current that flows only in one direction? (T5A04)	PPT Slide 5-22
6. What is the electrical term for an electromotive force (EMF) that causes electron flow? (T5A05)	PPT Slide 5-24
7. Which of the following is a good electrical conductor? (T5A07)	PPT Slide 5-26
8. Which of the following is a good electrical insulator? (T5A08)	PPT Slide 5-28

9. What is the name for a current that reverses direction on a regular basis? (T5A09)	PPT Slide 5-30
10. Which term describes the rate at which electrical energy is used? (T5A10)	PPT Slide 5-32
11. What is the basic unit of electromotive force? (T5A11)	PPT Slide 5-34
12. What is the formula used to calculate electrical power in a DC circuit? (T5C08)	PPT Slide 5-36
13. What formula is used to calculate current in a circuit? (T5D01)	PPT Slide 5-38
14. What formula is used to calculate voltage in a circuit? (T5D02)	PPT Slide 5-40
15. What formula is used to calculate resistance in a circuit? (T5D03)	PPT Slide 5-42
16. Which instrument would you use to measure electric potential or electromotive force? (T7D01)	PPT Slide 5-44
15. What is the correct way to connect a voltmeter to a circuit? (T7D02)	PPT Slide 5-46
16. How is an ammeter usually connected to a circuit? (T7D03)	PPT Slide 5-48
17. Which instrument is used to measure electric current? (T7D04)	PPT Slide 5-50
18. What instrument is used to measure resistance? (T7D05)	PPT Slide 5-52
19. Which of the following might damage a multimeter? (T7D06)	PPT Slide 5-54
20. Which of the following measurements are commonly made using a multimeter? (T7D07)	PPT Slide 5-56

21. What is probably happening when an ohmmeter, connected across a circuit, initially indicates a low resistance and then shows increasing resistance with time? (T7D10)	PPT Slide 5-58
22. Which of the following precautions should be taken when measuring circuit resistance with an ohmmeter? (T7D11)	PPT Slide 5-60

Demonstrations & Suggested Activities:

- Develop one or more practice tests using the Question Bank for this lesson. Allow students to take test after you complete lecture portion of lesson, above. Go over each test, as a group, using question answers as material to reinforce lecture.

Homework Suggestions to Reinforce Lesson Materials:

- Study lesson materials and applicable sample questions, as indicated in *HRLM*, pages 3-1 to 3-6.
- Read Chapter 3 in *ARRL Ham Radio License Manual* (2nd Edition), pages 3-6 to 3-14 in preparation for the next lesson.
- Introduce the students to the book publication, *Understanding Basic Electronics*, by Walter Banzhaf, WB1ANE, available through the ARRL Bookstore.

Question Pool – Applicable Questions to Chapter 3 – *HRLM*:

Module 4, Chapter 3
T5C09; T5C10; T5C11; T5D01; T5D02; T5D03; T5D04; T5D05; T5D06; T5D07; T5D08; T5D09; T5D10; T5D11; T5D12

Module 5, Chapter 3
T3B02; T5A01; T5A02; T5A03; T5A04; T5A05; T5A07; T5A08; T5A09; T5A10; T5A11; T5C08; T5C09; T5C10; T5C11; T5D01; T5D02; T5D03; T7D01; T7D02; T7D03; T7D04; T7D05; T7D06; T7D07; T7D10; T7D11

Module 6 – Lesson Plan

Electronic Components

Applicable Chapter: Chapter 3
Suggested Lesson Length: 1 Hour
Study & Lesson Materials: • *ARRL Ham Radio License Manual* (*HRLM*) 2nd Edition, pages 3-6 to 3-14. • Sample electronic components including diodes, resistors, capacitors, chokes, diodes, transistors, air-core inductors, integrated circuit. • Copy samples of schematic diagrams for class lesson. • Develop several versions of sample tests from the question pool for this chapter. These will be used during class for practice.
Recommended Strategy: • Introduce any other instructors who will join you for Module 6. • Keep in mind that your class will probably consist of people of varying levels of understanding of physical science. Keep your discussion as basic as possible. Pass around the various components and parts so that students can hold and touch them. For many, it will be the first time they have held a resistor or capacitor, etc. • From the background information on the students that you collected, see if are there any students in the group with a science/technology background who can aid in instructing this lesson (i.e., teaching assistant). • Discuss the overview of this lesson. Emphasize that the Technician class license requires a fundamental knowledge of electronics, but not an in-depth competency in the subject. Keep in mind that the student make-up of your class will be varied, both in age and educational level. Keep it simple. • Progress checks are embedded in the Lesson Topics so that you may periodically assess student learning and mastery of the Question Pool questions. The “stem” of the actual QP question is indicated as a question to pose to the class, as a group. Vary the students that you call upon to answer the questions as you pose them throughout the lesson. You will be able to monitor and measure learning in this manner.

Module Learning Objectives:

At the conclusion of this lesson, students will be able to:

3.2. Identify electrical components and units
[T5C01; T5C02; T5C03; T5C04; T6A01; T6A02; T6A03; T6A04; T6A05; T6A06; T6A07; T6A08; T6A09; T6B01; T6B02; T6B03; T6B04; T6B05; T6B06; T6B07; T6B08; T6B09; T6B10; T6B11; T6B12; T6C01; T6C02; T6C03; T6C04; T6C05; T6C06; T6C07; T6C08; T6C09; T6C10; T6C11; T6C12; T6C13; T6D01; T6D02; T6D03; T6D04; T6D06; T6D07; T6D08; T6D09; T6D10; T0A04; T0A05]

Lesson Topics	
Topic	**Notes**
Discuss components and units	
• Electronic circuits are made from components and the connections between them.	PPT Slide 6-2
• Basic components include resistors, capacitors and inductors (coils).	Pass around sample components.
• Resistors have specified resistances measured in ohms. Resistors oppose the flow of electrons in a circuit (T6A01).	PPT Slide 6-3
• Capacitors store electrical energy in the electric field created by voltage between two conducting surfaces called electrodes (T6A04) separated by an insulating dielectric (T6A05). This storing action is called capacitance and is measured in farads (F) (T5C01; T5C02).	PPT Slide 6-4
• Inductors store magnetic energy in the magnetic field created by current flowing through a wire (T6A06). This is called inductance and is measured in henrys (H) (T5C03; T5C04).	PPT Slide 6-5
• Inductors are made from wire wound around a core of magnetic material that concentrates the magnetic energy (T6A07).	

• Resistors, capacitors and inductors are also available in variable or adjustable models. A variable resistor is called a potentiometer (T6A02; T6A03). • Transformers are made from two or more inductors that share their stored energy (T6D06). • An S-meter is used to display signal strength (T6D04)	Administer quiz based on above questions and debrief.
Discuss reactance and impedance • Discuss the concept of capacitive reactance (X) and inductive reactance as phase differences of voltage and current. • Discuss capacitive reactance and inductive reactance. • Discuss impedance as a combination of resistance and reactance. Impedance is represented with a Z.	
Discuss resonance • Circuits that contain both capacitors and inductors will have at least one resonant frequency and are called resonant or tuned circuits (T6D08).	PPT Slides 6-6, 6-7 and 6-8
Discuss diodes, transistors and integrated circuits • Describe diodes, transistors and ICs as components, constructed from a semiconductor material, whose response to current and voltage depends on the polarity and value of current and voltage. • A semiconductor that only allows current to flow in one direction is called a diode (T6B02). • A diode has an anode and cathode. (T6B09). The cathode is usually identified with a stripe (T6B06). • Rectifiers are diodes that change AC to varying DC. (T6D01).	Pass around sample components.

• LEDs are a special type of diode that gives off light as current passes through it (T6B07). LEDs are often used as visual indicators (T6D07).	
• Transistors are components made from patterns of N and P materials that allow the transistor to use small voltages and current to control larger ones (T6B01; T6B03; T6B05). • A transistor's ability to amplify a signal is called gain (T6B12). • Two common types of transistors – bipolar junction transistors (BJT) and field-effect transistors (FET) (T6B08). • BJTs are made from alternating layers of P and N material (T6B04). Their electrodes are called, base, emitter, and collector (T6B10). • The FET is constructed as a conducting path or channel of N and P material. The gate electrode is used to control current flow through the channel (T6B11).	PPT Slide 6-9
• An integrated circuit (IC or chip) is made of many components connected together as a single useful circuit and packaged as a single component (T6D09).	PPT Slide 6-10 Administer quiz based on above questions and debrief.
Discuss protective components • Describe protective components as those that prevent equipment damage or mitigate safety hazards such as fire or electrical shock.	Pass around sample components.
• Fuses interrupt current overloads by melting a length of metal (T6A09). • Fuses cannot be reused (T0A04). • Circuit breakers perform also interrupt current overloads but are designed to be reused. • Do not use fuses of a higher rating than that for which the application specifies (T0A05).	PPT Slide 6-11
• Discuss surge protectors and lightning arrestors.	Administer quiz based on above questions and debrief.

Discuss circuit gatekeepers • Describe switches and relays as devices that control current through a circuit by connecting and disconnecting the paths current flow (T6A08). • A switch is operated manually, while a relay is a switch controlled by an electromagnet (T6D02). • Switches and relays are described by their number of “poles” and number of “throws.” Common types are single-pole (SP); double-pole (DP); single-throw (ST); double-throw (DT). Each pole controls the path of one current. Each throw refers to a different path for the current. A double-throw switch can route current through either of two paths, while a single throw can only open or close a single path (T6D03).	Pass around sample components.
Discuss schematics and component symbols • Pass out prepared schematic diagram samples to the class. • Discuss circuit symbols as visual descriptions of circuit components (T6C01; T6C12). • Identify the circuit symbols for resistor, capacitor, inductor, diode, transistor (T6C02 to T6C11). • Display a simple transistor circuit. Emphasize the component designators – transistor = Q; inductor = L; etc. (T6D10). • Circuit diagrams only indicate the way components are interconnected (T6C13).	PPT Slide 6-12 PPT Slide 6-13 Administer quiz based on above questions and debrief, or use progress check method.

Progress Check	
Question Stem	**PowerPoint Slides**
1 What is the ability to store energy in an electric field called? (T5C01)	PPT Slide 6-14
2. What is the basic unit of capacitance? (T5C02)	PPT Slide 6-16
3. What is the ability to store energy in a magnetic field called? (T5C03)	PPT Slide 6-18
4. What is the basic unit of inductance? (T5C04)	PPT Slide 6-20
5. What electrical component is used to oppose the flow of current in a DC circuit? (T6A01)	PPT Slide 6-22
6. What type of component is often used as an adjustable volume control? (T6A02)	PPT Slide 6-24
7. What electrical parameter is controlled by a potentiometer? (T6A03)	PPT Slide 6-26
8. What electrical component stores energy in an electric field? (T6A04)	PPT Slide 6-28
9. What type of electrical component consists of two or more conductive surfaces separated by an insulator? (T6A05)	PPT Slide 6-30
10. What electrical component stores energy in a magnetic field? (T6A06)	PPT Slide 6-32
11. What electrical component is usually composed of a coil of wire? (T6A07)	PPT Slide 6-34
12. What electrical component is used to connect or disconnect electrical circuits? (T6A08)	PPT Slide 6-36
13. What electrical component is used to protect other circuit components from current overloads? (T6A09)	PPT Slide 6-38

14. What class of electronic components is capable of using a voltage or current signal to control current flow? (T6B01)	PPT Slide 6-40
15. What electronic component allows current to flow in only one direction? (T6B02)	PPT Slide 6-42
16. Which of these components can be used as an electronic switch or amplifier? (T6B03)	PPT Slide 6-44
17. Which of these components is made of three layers of semiconductor material? (T6B04)	PPT Slide 6-46
18. Which of the following electronic components can amplify signals? (T6B05)	PPT Slide 6-48
19. How is a semiconductor diode's cathode lead usually identified? (T6B06)	PPT Slide 6-50
20. What does the abbreviation "LED" stand for? (T6B07)	PPT Slide 6-52
21. What does the abbreviation "FET" stand for? (T6B08)	PPT Slide 6-54
22. What are the names of the two electrodes of a diode? (T6B09)	PPT Slide 6-56
23. Which semiconductor component has an emitter electrode? (T6B10)	PPT Slide 6-58
24. Which semiconductor component has a gate electrode? (T6B11)	PPT Slide 6-60
25. What is the term that describes a transistor's ability to amplify a signal? (T6B12)	PPT Slide 6-62
26. What is the name for standardized representations of components in an electrical wiring diagram? (T6C01)	PPT Slide 6-64

Display the following schematic symbols on the board and ask students to identify the component: Resistor; Transistor; Lamp; Battery; Capacitor; LED; Variable Resistor; Transformer; Variable Inductor; Antenna; SPST Switch. (T6C02 to T6C12)	
27. Which of the following is accurately represented in electrical circuit schematic diagrams? (T6C13)	PPT Slide 6-66
28. Which of the following devices or circuits changes an alternating current into a varying direct current signal? (T6D01)	PPT Slide 6-68
29. Which best describes a relay? (T6D02)	PPT Slide 6-70
30. Which of the following can be used to display signal strength on a numeric scale? (T6D04)	PPT Slide 6-72
31. What component is commonly used to change 120V AC house current to a lower AC voltage for other uses? (T6D06)	PPT Slide 6-74
32. Which of the following is commonly used as a visual indicator? (T6D07)	PPT Slide 6-76
33. Which of the following is used together with an inductor to make a tuned circuit? (T6D08)	PPT Slide 6-78
34. What is the name of the device that combines several semiconductors and other components into one package? (T6D09)	PPT Slide 6-80
35. What is the purpose of a fuse in an electrical circuit? (T0A04)	PPT Slide 6-82
36. Why is it unwise to install a 20-ampere fuse in the place of a 5 ampere fuse? (T0A05)	PPT Slide 6-84

Demonstrations & Suggested Activities:

- Have ample sample electronic components including diodes, resistors, capacitors, chokes, diodes, transistors, air-core inductors, integrated circuits to pass around for students to touch and study.

Homework Suggestions to Reinforce Lesson Materials:

- Study lesson materials in the *Ham Radio License Manual* pages 3-6 through 3-14 and study applicable sample questions, as indicated in *HRLM*.
- Read pages 3-15 to 3-19 in the *HRLM* in preparation for the next lesson.
- Refer students to the book *Understanding Basic Electronics*, 2nd edition by Walter Banzhaf, WB1ANE, available through the ARRL Bookstore.

Question Pool – Applicable Questions to Chapter 3 – *HRLM*:

Module 4, Chapter 3
T5C09; T5C10; T5C11; T5D01; T5D02; T5D03; T5D04; T5D05; T5D06; T5D07; T5D08; T5D09; T5D10; T5D11; T5D12

Module 5, Chapter 3
T3B02; T5A01; T5A02; T5A03; T5A04; T5A05; T5A07; T5A08; T5A09; T5A10; T5A11; T5C08; T5C09; T5C10; T5C11; T5D01; T5D02; T5D03; T7D01; T7D02; T7D03; T7D04; T7D05; T7D06; T7D07; T7D10; T7D11

Module 6, Chapter 3
T5C01; T5C02; T5C03; T5C04; T6A01; T6A02; T6A03; T6A04; T6A05; T6A06; T6A07; T6A08; T6A09; T6B01; T6B02; T6B03; T6B04; T6B05; T6B06; T6B07; T6B08; T6B09; T6B10; T6B11; T6B12; T6C01; T6C02; T6C03; T6C04; T6C05; T6C06; T6C07; T6C08; T6C09; T6C10; T6C11; T6C12; T6C13; T6D01; T6D02; T6D03; T6D04; T6D06; T6D07; T6D08; T6D09; T6D10; T0A04; T0A05

Module 7 – Lesson Plan

Types of Radios and Radio Circuits

Applicable Chapter: Chapter 3
Suggested Lesson Length: 1 Hour
Study & Lesson Materials: • *ARRL Ham Radio License Manual* (*HRLM*) 2nd Edition, pages 3-15 to 3-19.
Recommended Strategy: • Introduce any other instructors who will join you for this lesson. • Keep in mind that your class will probably consist of people of varying levels of understanding of physical science. Keep your discussion as basic as possible. • From the background information on the students that you collected, see if are there any students in the group with a science/technology background who can aid in instructing this lesson (i.e., teaching assistant). • Discuss the overview of this lesson. Emphasize that the Technician class license requires a fundamental knowledge of electronics, but not an in-depth competency in the subject. Keep in mind that the student make-up of your class will be varied, both in age and educational level. Keep it simple. • Progress checks are embedded in the Lesson Topics so that you may periodically assess student learning and mastery of the Question Pool questions. The “stem” of the actual QP question is indicated as a question to pose to the class, as a group. Vary the students that you call upon to answer the questions as you pose them throughout the lesson. You will be able to monitor and measure learning in this manner.

Module Learning Objectives: At the conclusion of this lesson, students will be able to: 3.3. Identify types of radios and radio circuits. [T7A01; T7A02; T7A03; T7A04; T7A05; T7A06; T7A07; T7A08; T7A09; T7A10; T7A11; T7A12; T7A13]

Lesson Topics	
Topic	**Notes**
Discuss types of radios and radio circuits and basic radio station equipment. • Student should be familiar with basic concepts only. • Transmit-receive switches (TR switches) – a historical note (T7A07). (Note: This question was also discussed in Chapter 2, Module 3.)	PPT Slide 7-2 PPT Slide 7-3 PPT Slide 7-4
What happens during communication? • Describe the basic transmission of a signal and transmitter functions. • Describe basic receiver functions.	PPT Slide 7-5 PPT Slide 7-6 PPT Slide 7-7
Circuit building blocks • Oscillators and amplifiers o An oscillator produces a steady signal at one frequency. Be familiar with Figure 3-17 in HRLM. (T7A05).	PPT Slide 7-8
• Filters o Radio circuits that remove unwanted signals. Discuss various filters in a transceiver – band-pass, low-pass; etc.	PPT Slide 7-9
• Modulators o The process of combining data or voice signals with an RF signal is modulation. The circuit itself is called a modulator (T7A08).	Continue PPT Slide 7-9
• Mixers o A mixer combines two RF signals.	Continue PPT Slide 7-9
• Demodulators o A demodulator separates data or voice signals from RF signals.	Continue PPT Slide 7-9
• Detectors o Detectors make up one category of demodulators. A detector converts a modulated RF signal directly to a data or voice signal.	Continue PPT Slide 7-9

• Product Detector o Detectors for CW and SSB need to reproduce the signal's frequency, not just the amplitude. A product detector detects CW and SSB signals by combining a signal at the frequency of the modulated signal's RF carrier with the modulated signal itself. (T7A01).	Continue PPT Slide 7-9
• Frequency Discriminators o A discriminator translates the variations of the FM signal's frequency back to the original signal used to modulate the RF carrier (T7A11).	Continue PPT Slide 7-9

Receivers
• Discuss the various receiver designs – direct conversion; superheterodyne; digital signal processing.
• Recognize the superheterodyne circuit diagram, Figure 3-19 in the HRLM (T7A03).
• Recognize the single conversion superheterodyne circuit, Figure 3-20 in the HRLM (T7A02).
• Recognize Figure 3-21, a superheterodyne receiver circuit as an FM receiver (T7A04).
• Selectivity and sensitivity
  o The two bases of comparison for receivers.
  o Preamplifiers are connected between the antenna and receiver (T7A13).
  o Selectivity is the ability of a receiver to retrieve the information from just the desired signal in the presence of unwanted signals (T7A12).
  o Describe VHF weak-signal and multimode transceivers (T7A09). (Note: This question will also be discussed in Chapter 6, Module 14.)	

Transverters • Explain how this device employs the superheterodyne technique of shifting signal frequencies to allow a radio to transmit and receive on frequencies other than those for which it was designed (T7A06). Power amplifiers • Discuss RF power amplifiers used with transceivers (T7A10). (Note: This question will also be discussed in Chapter 5, Module 11.)	Administer quiz based on above questions and debrief, or use progress check method.

Progress Check	
Question Stem	**PowerPoint Slide**
1. What is the function of a product detector? (T7A01)	PPT Slide 7-10
2. What type of receiver is shown in Figure T6? (T7A02)	PPT Slide 7-12
3. What is the function of a mixer in a superheterodyne receiver? (T7A03)	PPT Slide 7-14
4. What circuit is pictured in Figure T7, if block 1 is a frequency discriminator? (T7A04)	PPT Slide 7-16
5. What is the function of block 1 if figure T4 is a simple CW transmitter? (T7A05)	PPT Slide 7-18
6. What device takes the output of a low-powered 28 MHz SSB exciter and produces a 222 MHz output signal? (T7A06)	PPT Slide 7-20
7. If figure T5 represents a transceiver in which block 1 is the transmitter portion and block 3 is the receiver portion, what is the function of block 2? (T7A07)	PPT Slide 7-22
8. Which of the following circuits combines a speech signal with an RF carrier? (T7A08)	PPT Slide 7-24

9. Which of the following devices is most useful for VHF weak-signal communication? (T7A09)	PPT Slide 7-26
10. What device increases the low-power output from a handheld transceiver? (T7A10)	PPT Slide 7-28
11. Which of the following circuits demodulates FM signals? (T7A11)	PPT Slide 7-30
12. Which term describes the ability of a receiver to discriminate between multiple signals? (T7A12)	PPT Slide 7-32
13. Where is an RF preamplifier installed? (T7A13)	PPT Slide 7-34

Demonstrations & Suggested Activities:

- Develop one or more practice tests using the Question Bank for this lesson. Allow students to take test after you complete lecture portion of lesson, above. Go over each test, as a group, using question answers as material to reinforce lecture.

Homework Suggestions to Reinforce Lesson Materials:

- Study lesson materials and applicable sample questions, as indicated in *ARRL Ham Radio License Manual* (2nd Edition), pages 3-15 to 3-19.
- Read Chapter 4 in *ARRL Ham Radio License Manual* (2nd Edition), pages 4-1 to 4-4 in preparation for the next lesson.
- Refer students to the book *Understanding Basic Electronics* by Walter Banzhaf, WB1ANE, available through the ARRL Bookstore.

Question Pool – Applicable Questions to Chapter 3 – *HRLM*:

Module 4, Chapter 3
T5C09; T5C10; T5C11; T5D01; T5D02; T5D03; T5D04; T5D05; T5D06; T5D07; T5D08; T5D09; T5D10; T5D11; T5D12

Module 5, Chapter 3
T3B02; T5A01; T5A02; T5A03; T5A04; T5A05; T5A07; T5A08; T5A09; T5A10; T5A11; T5C08; T5C09; T5C10; T5C11; T5D01; T5D02; T5D03; T7D01; T7D02; T7D03; T7D04; T7D05; T7D06; T7D07; T7D10; T7D11

Module 6, Chapter 3
T5C01; T5C02; T5C03; T5C04; T6A01; T6A02; T6A03; T6A04; T6A05; T6A06; T6A07; T6A08; T6A09; T6B01; T6B02; T6B03; T6B04; T6B05; T6B06; T6B07; T6B08; T6B09; T6B10; T6B11; T6B12; T6C01; T6C02; T6C03; T6C04; T6C05; T6C06; T6C07; T6C08; T6C09; T6C10; T6C11; T6C12; T6C13; T6D01; T6D02; T6D03; T6D04; T6D06; T6D07; T6D08; T6D09; T6D10; T0A04; T0A05

Module 7, Chapter 3
T7A01; T7A02; T7A03; T7A04; T7A05; T7A06; T7A07; T7A08; T7A09; T7A10; T7A11; T7A12; T7A13

Module 8 – Lesson Plan

Propagation

Applicable Chapter: Chapter 4
Suggested Lesson Length: 2 Hours
Study & Lesson Materials: • *ARRL Ham Radio License Manual* (*HRLM*) 2nd Edition, pages 4-1 to 4-4. • Sample of relevant Question Pool questions. • Laptop computer and propagation software program • Have on hand audio recordings of various signal sounds in various propagation modes.
Recommended Strategy: • Introduce any co-instructor(s) for this lesson. • Keep in mind that your class will probably consist of people of varying levels of understanding of physical science. Keep your discussion as basic as possible. • From the background information on the students that you collected, see if are there any students in the group with a science/technology background who can aid in instructing this lesson (i.e., teaching assistant). • Progress checks are embedded in the Lesson Topics so that you may periodically assess student learning and mastery of the Question Pool questions. The “stem” of the actual QP question is indicated as a question to pose to the class, as a group. Vary the students that you call upon to answer the questions as you pose them throughout the lesson. You will be able to monitor and measure learning in this manner.

Module Learning Objectives: At the conclusion of this lesson, students will be able to: 4.1. Discuss Propagation. [T3A01; T3A02; T3A06; T3A08; T3A10; T3A11; T3C01; T3C02; T3C03; T3C04; T3C05; T3C06; T3C07; T3C08; T3C09; T3C10; T3C11]

Lesson Topics	
Topic	**Notes**
Discuss propagation and radio wave characteristics.	PPT Slide 8-2
How do radio waves travel from place to place?	
• How does propagation affect the Amateur Radio operator?	
• How does the ham *predict* propagation?	If possible, demonstrate a propagation software program
• Discuss communication range	
• Discuss radio horizon (T3C10)	
• Discuss line-of-sight (T3C11)	PPT Slide 8-3
• Discuss ground wave	PPT Slide 8-4
• Discuss diffraction	
• Discuss knife-edge (T3C05)	
• Discuss VHF and UHF wave penetration inside buildings (T3A02)	PPT Slide 8-5
• Discuss multi-path (T3A01; T3A08; T3A10)	
• Discuss flutter or picket-fencing (T3A06)	If possible, have on hand an audio recording of various signal sounds in various propagation modes. Play audio recording.
• Discuss tropospheric ducting (T3C08)	
How does the ionosphere affect radio signals?	
• Discuss the sunspot cycle	PPT Slide 8-6
• What is the ionosphere?	PPT Slides 8-7 and 8-8
• Why are radio waves diffracted?	
• Discuss sky wave propagation — refraction, skip, hops (T3A11)	PPT Slide 8-9
• Discuss ionospheric reflection and VHF and UHF signals. (T3C01)	
• Discuss MUF/LUF (T3C09)	
• Discuss sporadic E (T3C02; T3C04)	
• Discuss auroral reflection (T3C03)	
• Discuss tropospheric scatter (T3C06)	
• Discuss 6 meter band characteristics (T3C07)	Administer quiz based on above questions and debrief, or use the progress check below.

Progress Check	
Question Stem	**PowerPoint Slide**
1. What should you do if another operator reports that your station's 2 meter signals were strong just a moment ago, but now they are weak or distorted? (T3A01)	PPT Slide 8-10
2. Why are UHF signals often more effective from inside buildings than VHF signals? (T3A02)	PPT Slide 8-12
3. What term is commonly used to describe the rapid fluttering sound sometimes heard from mobile stations that are moving while transmitting? (T3A06)	PPT Slide 8-14
4. What is the cause of irregular fading of signals from distant stations during times of generally good reception? (T3A08)	PPT Slide 8-16
5. What may occur if VHF or UHF data signals propagate over multiple paths? (T3A10)	PPT Slide 8-18
6. Which part of the atmosphere enables the propagation of radio signals around the world? (T3A11)	PPT Slide 8-20
7. Why are "direct" (not via a repeater) UHF signals rarely heard from stations outside your local coverage area? (T3C01)	PPT Slide 8-22
8. Which of the following might be happening when VHF signals are being received from long distances? (T3C02)	PPT Slide 8-24
9. What is a characteristic of VHF signals received via auroral reflection? (T3C03)	PPT Slide 8-26
10. Which of the following propagation types is most commonly associated with occasional strong over-the-horizon signals on the 10, 6, and 2 meter bands? (T3C04)	PPT Slide 8-28

12. What is meant by the term “knife-edge” propagation? (T3C05)	PPT Slide 8-30
13. What mode is responsible for allowing over-the-horizon VHF and UHF communications to ranges of approximately 300 miles on a regular basis? (T3C06)	PPT Slide 8-32
14. What band is best suited to communicating via meteor scatter? (T3C07)	PPT Slide 8-34
15. What causes “tropospheric ducting?” (T3C08)	PPT Slide 8-36
16. What is generally the best time for long-distance 10 meter band propagation? (T3C09)	PPT Slide 8-38
17. What is the radio horizon? (T3C10)	PPT Slide 8-40
18. Why do VHF and UHF radio signals usually travel somewhat farther than the visual line of sight distance between two stations? (T3C11)	PPT Slide 8-42

Demonstrations and Suggested Activities:

Use a propagation program to demonstrate its use to students. Two possibilities (both free of charge) are:

- *W6ELProp*, **www.qsl.net/w6elprop**
- *PropLab Pro*, **www.spacew.com/proplab**

Homework Suggestions to Reinforce Lesson Materials:

- Study lesson material and review test items pertaining to lesson *ARRL Ham Radio License Manual* (2nd Edition), pp 4-1 to 4-4.
- Read Chapter 4 in *ARRL Ham Radio License Manual* (2nd Edition), pages 4-5 to 4-10 in preparation for the next lesson.
- Refer students to these books from the ARRL Bookstore: *Basic Antennas* by Joel Hallas, W1ZR and *Radio Propagation – Principles & Practice* by Ian Poole G3YWX.

Question Pool – Applicable Questions to Chapter 4 – *HRLM*:

Module 8, Chapter 4
T3A01; T3A02; T3A06; T3A08; T3A10; T3A11; T3C01; T3C02; T3C03; T3C04; T3C05; T3C06; T3C07; T3C08; T3C09; T3C10; T3C11

Module 9 – Lesson Plan

Antennas and Feed Lines

Applicable Chapter: Chapter 4
Suggested Lesson Length: 2 Hours
Study & Lesson Materials: • *ARRL Ham Radio License Manual (HRLM*) 2nd Edition, pages 4-5 to 4-10. • Sample of relevant Question Pool questions. • Samples of coaxial cable of various sizes • Samples of twin-lead or open wire feed line • Antenna tuner • SWR meter • Antenna analyzer • Projector and photos of member antenna systems
Recommended Strategy: • Introduce any co-instructor(s) for this lesson. • Introduce topic of antennas. The most expensive radio is of little use without an effective antenna. • Keep in mind that your class will probably consist of people of varying levels of understanding of physical science. Keep your discussion as basic as possible. • From the background information on the students that you collected, see if are there any students in the group with a science/technology background who can aid in instructing this lesson (i.e., teaching assistant). • Progress checks are embedded in the Lesson Topics so that you may periodically assess student learning and mastery of the Question Pool questions. The “stem” of the actual QP question is indicated as a question to pose to the class, as a group. Vary the students that you call upon to answer the questions as you pose them throughout the lesson. You will be able to monitor and measure learning in this manner.

Module Learning Objectives:

At the conclusion of this lesson, students will be able to:

4.2. Discuss antenna fundamentals.
[T3A03; T3A04; T3A07; T3A09; T3B03; T5B09; T5B10; T5B11; T5C07; T9A02; T9A11]

4.3. Discuss feed Lines and SWR.
[T6D11; T7C03; T7C04; T7C05; T7C06; T7C07; T9B01; T9B02; T9B03; T9B05; T9B09; T9B11]

Lesson Topics

Topic	Notes
Antenna Fundamentals.	PPT Slide 9-2
What is an antenna? • Define feed line; feed point impedance; elements; driven element. • Discuss radio wave comprised of both electric and magnetic energy (T3B03) • Define electromagnetic wave (T5C07; T3A07)	PPT Slide 9-3
• Define polarization – both horizontal and vertical (T9A02) • Discuss effects of misalignment of polarization (T3A04, T3A09)	PPT Slide 9-4
Antenna gain • Discuss how gain increases signal strength (T9A11)	PPT Slide 9-5
• Define decibel (T5B09; T5B10; T5B11)	Work through some examples.
• Discuss radiation patterns o Azimuth vs elevation (horizontal vs vertical)	PPT Slides 9-6 and 9-7 Administer quiz based on above questions and debrief or conduct the progress check below.

Progress Check	
Question Stem	**PowerPoint Slide**
1. What can happen if the antennas at opposite ends of a VHF or UHF line of sight radio link are not using the same polarization? (T3A04)	PPT Slide 9-8
2. What type of wave carries radio signals between transmitting and receiving stations? (T3A07)	PPT Slide 9-10
3. Which of the following is a common effect of “skip” reflections between the Earth and the ionosphere? (T3A09)	PPT Slide 9-12
4. What are the two components of a radio wave? (T3B03)	PPT Slide 9-14
5. What is the approximate amount of change, measured in decibels (dB), of a power increase from 5 watts to 10 watts? (T5B09)	PPT Slide 9-16
6. What is the approximate amount of change, measured in decibels (dB), of a power increase from 20 watts to 200 watts? (T5B09)	PPT Slide 9-18
7. What is a usual name for electromagnetic waves that travel through space? (T5C07)	PPT Slide 9-20
8. Which of the following is true regarding vertical antennas? (T9A02)	PPT Slide 9-22
9. What is meant by the gain of an antenna? (T9A11)	PPT Slide 9-24

Lesson Topics	
Topic	**Notes**
Discuss feed lines and SWR	PPT Slides 9-26 and 9-27
Feed lines • Discuss feed line loss and its effects on signal output (T7C07; T9B05). • Discuss coaxial cable and how it is constructed (T6D11; T9B03). • Discuss hardline (T9B11). • Discuss open-wire feed line. • Discuss characteristic impedance and 50 ohm line (T9B02).	Pass around samples of feed line PPT Slide 9-28 PPT Slide 9-29 PPT Slides 9-30 and 9-31 Administer quiz based on above questions and debrief
Matching and SWR • Discuss standing wave ratio – SWR • Discuss concepts of matching and reflected power. • Discuss the ratio – SWR, forward and reflected power and perfect match (T7C03; T7C04) • Describe mismatch (T7C06) • Discuss reasons for wanting to achieve low SWR (T9B01) • Discuss transceiver high SWR protection circuits (T7C05) • Discuss using an SWR meter • Discuss antenna tuners • Discuss causes for erratic SWR (T9B09).	PPT Slide 9-32 PPT Slide 9-33 Demonstrate SWR meter and antenna analyzer PPT Slides 9-34 and 9-35 PPT Slides 9-36 and 9-37 Demonstrate antenna tuner operation Administer quiz based on above questions and debrief or use progress check below.

Progress Check	
Question Stem	**PowerPoint Slide**
1. Which of the following is a common use of coaxial cable? (T6D11)	PPT Slide 9-38
2. What, in general terms, is standing wave ratio (SWR)? (T7C03)	PPT Slide 9-40

3. What reading on an SWR meter indicates a perfect impedance match between the antenna and the feedline? (T7C04)	PPT Slide 9-42
4. What is the approximate SWR value above which the protection circuits in most solid-state transmitters begin to reduce transmitter power? (T7C05)	PPT Slide 9-44
5. What does an SWR reading of 4:1 mean? (T7C06)	PPT Slide 9-48
6. What happens to power lost in a feedline? (T7C07)	PPT Slide 9-48
7. Why is it important to have a low SWR in an antenna system that uses coaxial cable feedline? (T9B01)	PPT Slide 9-50
8. What is the impedance of the most commonly used coaxial cable in typical amateur radio installations? (T9B02)	PPT Slide 9-52
9. Why is coaxial cable used more often than any other feedline for amateur radio antenna systems? (T9B03)	PPT Slide 9-54
10. What generally happens as the frequency of a signal passing through coaxial cable is increased? (T9B05)	PPT Slide 9-56
11. What might cause erratic changes in SWR readings? (T9B09)	PPT Slide 9-58
12. Which of the following types of feed line has the lowest loss at VHF and UHF? (T9B11)	PPT Slide 9-60

Demonstrations & Suggested Activities:

- Solve a length equation for a quarter wavelength 2 meter vertical antenna and compare the result to an actual antenna. Break students into small groups and give each group a band/frequency to solve for antenna length.
- Pass around different kinds of coax (RG-8; RG-58; hardline) and antenna materials and connectors.

- Set up a simple dipole antenna in the classroom and demonstrate how to use an antenna analyzer to measure SWR. Show how SWR changes across the operating band and also when operating on different bands.

- Insert an antenna tuner into an antenna feed line and demonstrate how it works.

- Create a loose connection on a dipole antenna. Show that the connection is intermittent when the antenna is moved. Use an SWR meter or antenna analyzer to demonstrate the indications of a loose connector.

Homework Suggestions to Reinforce Lesson Materials:

- Study lesson material and review test items pertaining to Module 9, *ARRL Ham Radio License Manual* (2nd Edition), pages 4-5 to 4-10.

- Read remaining Chapter 4 in *ARRL Ham Radio License Manual* (2nd Edition), pages 4-11 to 4-18 in preparation for the next lesson.

Question Pool – Applicable Questions to Chapter 4 – *HRLM*:

Module 8, Chapter 4
T3A01; T3A02; T3A06; T3A08; T3A10; T3A11; T3C01; T3C02; T3C03; T3C04; T3C05; T3C06; T3C07; T3C08; T3C09; T3C10; T3C11

Module 9, Chapter 4
T3A04; T3A07; T3A09; T3B03; T5B09; T5B10; T5B11; T5C07; T6D11; T7C03; T7C04; T7C05; T7C06; T7C07; T9A02; T9A11; T9B01; T9B02; T9B03; T9B05; T9B09; T9B11

Module 10 – Lesson Plan

Practical Antenna Systems

Applicable Chapter: Chapter 4
Suggested Lesson Length: 1 Hour
Study & Lesson Materials: • *ARRL Ham Radio License Manual (HRLM*) 2nd Edition, pages 4-11 to 4-18. • Sample of relevant Question Pool questions. • Samples of antenna wire; twin-lead feed line; RG-8 coax; magnetic mount mobile antenna; flexible rubber antenna (for handhelds) • Antenna tuner • Samples of PL-259 and other connectors; standoffs and insulators. • Balun • SWR meter/antenna analyzer • Projector and photos of member antenna systems
Recommended Strategy: • Introduce any co-instructor(s) for this lesson. • Introduce topic of practical antennas. The most expensive radio is of little use without an effective antenna. • Keep in mind that your class will probably consist of people of varying levels of understanding of physical science. Keep your discussion as basic as possible. • From the background information on the students that you collected, see if are there any students in the group with a science/technology background who can aid in instructing this lesson (i.e., teaching assistant). • Progress checks are embedded in the Lesson Topics so that you may periodically assess student learning and mastery of the Question Pool questions. The “stem” of the actual QP question is indicated as a question to pose to the class, as a group. Vary the students that you call upon to answer the questions as you pose them throughout the lesson. You will be able to monitor and measure learning in this manner.

Module Learning Objectives:

At the conclusion of this lesson, students will be able to:

4.4 Discuss Practical Antenna Systems.
[T3A03; T3A05; T7C01; T7C02; T7C08; T7C09; T7C10; T7C11; T7D08; T7D09; T9A01; T9A03; T9A04; T9A05; T9A06; T9A07; T9A08; T9A09; T9A10; T9B04; T9B06; T9B07; T9B08; T9B10]

Lesson Topics	
Topic	**Notes**
Discuss practical, basic antenna systems • Discuss dipole antennas • Show how to calculate dipole length for given frequency (T9A05) • Discuss horizontal polarization (T9A03) • Discuss broadside radiation of a dipole (T9A10)	PPT Slides 10-2 and 10-3 Pass around antenna wire and insulators L = 468/frequency in MHz
• Discuss ¼ wavelength ground-planes – half of dipole (T9A08; T9A09)	PPT Slides 10-4 and 10-5
• Discuss wire loops • Present and discuss the radiation patterns of a Yagi; dipole; and omnidirectional vertical. Explain how each functions.	PPT Slide 10-6
• Discuss flexible antennas (“rubber ducks”) for handhelds (T9A04) • Discuss mobile antennas (T9A07)	Show examples of mobile antennas and antennas for handhelds Administer quiz based on above questions and debrief
Discuss directional antennas • Discuss focusing transmitted power (T9A01) • Describe the Yagi • Describe the Quad	PPT Slides 10-7 and 10-8
• Define terms – booms; parasitic arrays; directors and reflectors • Describe how beams can be used at VHF/UHF (T3A05) • Discuss antenna polarization at VHF/UHF (T3A03)	PPT Slide 10-9

• Discuss the dish directional antennas (T9A06)	
Discuss practical feed lines and associated equipment	PPT Slide 10-10
• Discuss feed line selection and maintenance	
• Discuss soldering techniques. (T7D08; T7D09).	
• Review benefits of coaxial cable (also discussed in Module 9)	PPT Slides 10-11 and 10-12
• Larger diameter coax = less loss (T9B10)	Show samples of RG-58 and RG-8
• Nicks, cuts, abrasion can allow water to penetrate and contaminate coax (T7C09).	
• Prolonged exposure to ultraviolet light can damage outer jacket of coax and allow moisture in (T7C10).	
Discuss coax feed line connectors	PPT Slide 10-13
• PL-259 connectors are commonly used at HF (T9B07).	Pass around PL-259 and N connectors
• Above 400 MHz Type N connectors are used (T9B06).	
• Connectors should be weatherproofed to keep moisture from entering and degrading effectiveness of coax line (T9B08).	
• Air core coax requires special techniques to prevent water absorption (T7C11).	
• Discuss practical techniques for weatherproofing the antenna and making sound mechanical connections.	Demonstrate ways to waterproof coax connectors.
Discuss antenna measurements and adjustments	PPT Slide 10-14
• Discuss SWR meters and watt meters and how they present SWR	PPT Slides 10-15 and 10-16 Demonstrate SWR meter operation
• Antenna tuners and what they do (T9B04)	PPT Slides 10-17 and 10-18 Demonstrate antenna tuner operation
• Antenna analyzers and what they do (T7C02)	Demonstrate antenna analyzer operation
• Discuss how to adjust an antenna and make SWR better.	PPT Slide 10-19

• Dummy loads and what they do (T7C01, also discussed in Chapter 5, Module 11) • Calculating SWR from forward and reflected power (T7C08).	
Discuss antenna supports.	PPT Slide 10-20 Administer quiz based on above questions and debrief.

Progress Check	
Question Stem	**PowerPoint Slide**
1. What antenna polarization is normally used for long-distance weak-signal CW and SSB contacts using the VHF and UHF bands? (T3A03)	PPT Slide 10-21
2. When using a directional antenna, how might your station be able to access a distant repeater if buildings or obstructions are blocking the direct line of sight path? (T3A05)	PPT Slide 10-23
3. What is the primary purpose of a dummy load? (T7C01)	PPT Slide 10-25
4. Which of the following instruments can be used to determine if an antenna is resonant at the desired operating frequency? (T7C02)	PPT Slide 10-27
5. What instrument other than an SWR meter could you use to determine if a feedline and antenna are properly matched? (T7C08)	PPT Slide 10-29
6. Which of the following is the most common cause for failure of coaxial cables? (T7C09)	PPT Slide 10-31
7 Why should the outer jacket of coaxial cable be resistant to ultraviolet light? (T7C10)	PPT Slide 10-33

8. What is a disadvantage of “air core” coaxial cable when compared to foam or solid dielectric types? (T7C11)	PPT Slide 10-35
9. Which of the following types of solder is best for radio and electronic use? (T7D08)	PPT Slide 10-37
10. What is the characteristic appearance of a “cold” solder joint? (T7D09)	PPT Slide 10-39
11. What is a beam antenna? (T9A01)	PPT Slide 10-41
12. Which of the following describes a simple dipole mounted so the conductor is parallel to the earth’s surface? (T9A03)	PPT Slide 10-43
13. What is a disadvantage of the “rubber duck” antenna supplied with most handheld radio transceivers? (T9A04)	PPT Slide 10-45
14. How would you change a dipole to make it resonant on a higher frequency? (T9A05)	PPT Slide 10-47
15. What type of antennas are the quad, Yagi, and dish? (T9A06)	PPT Slide 10-49
16. What is a good reason not to use a “rubber duck” antenna inside of your car? (T9A07)	PPT Slide 10-51
17. What is the approximate length, in inches, of a quarter-wavelength vertical antenna for 146 MHz? (T9A08)	PPT Slide 10-53
18. What is the approximate length, in inches, of a 6 meter ½-wavelength wire dipole antenna? (T9A09)	PPT Slide 10-55
19. In which direction is the radiation strongest for a half-wave dipole antenna in free space? (T9A10)	PPT Slide 10-57
20. What does an antenna tuner do? (T9B04)	PPT Slide 10-59
21. Which of the following connectors is most suitable for frequencies above 400 MHz? (T9B06)	PPT Slide 10-61

22. Which of the following is true of PL-259 type coax connectors? (T9B07)	PPT Slide 10-63
23. Why should coax connectors exposed to the weather be sealed against water intrusion? (T9B08)	PPT Slide 10-65
24. What electrical difference exists between the smaller RG-58 and larger RG-8 coaxial cables? (T9B10)	PPT Slide 10-67

Demonstrations & Suggested Activities:

- Solve a length equation for a quarter wavelength 2 meter vertical antenna and compare the result to an actual antenna. Break students into small groups and give each group a band/frequency to solve for antenna length.
- Pass around different kinds of coax (RG-8; RG-58; hardline) and antenna materials and connectors.
- Set up a simple dipole antenna in the classroom and demonstrate how to use an antenna analyzer to measure SWR. Show how SWR changes across the operating band and also when operating on different bands.
- Insert an antenna tuner into an antenna feed line and demonstrate how it works.
- Create a loose connection on a dipole antenna. Show that the connection is intermittent when the antenna is moved. Use an SWR meter or antenna analyzer to demonstrate the indications of a loose connector.

Homework Suggestions to Reinforce Lesson Materials:

- Study lesson material and review test items pertaining to Lesson 10, *ARRL Ham Radio License Manual* (2nd Edition), pages 4-14 to 4-18.
- Read Chapter 5 in *ARRL Ham Radio License Manual* (2nd Edition), pages 5-1 to 5-24 in preparation for the next lesson.
- Refer students to these books from the ARRL Bookstore: *Basic Antennas* by Joel Hallas, W1ZR and *Radio Propagation – Principles & Practice* by Ian Poole G3YWX.

Question Pool – Applicable Questions to Chapter 4 – *HRLM*:

Module 8, Chapter 4
T3A01; T3A02; T3A06; T3A08; T3A10; T3A11; T3C01; T3C02; T3C03; T3C04; T3C05; T3C06; T3C07; T3C08; T3C09; T3C10; T3C11

Module 9, Chapter 4
T3A04; T3A07; T3A09; T3B03; T5B09; T5B10; T5B11; T5C07; T6D11; T7C03; T7C04; T7C05; T7C06; T7C07; T9A02; T9A11; T9B01; T9B02; T9B03; T9B05; T9B09; T9B11

Module 10, Chapter 4
T3A03; T3A05; T7C01; T7C02; T7C08; T7C09; T7C10; T7C11; T7D08; T7D09; T9A01; T9A03; T9A04; T9A05; T9A06; T9A07; T9A08; T9A09; T9A10; T9B04; T9B06; T9B07; T9B08; T9B10

Module 11 – Lesson Plan

Basic Amateur Radio Station Equipment

Applicable Chapter: Chapter 5
Suggested Lesson Length: 2 Hours
Study & Lesson Materials: • *ARRL Ham Radio License Manual* (*HRLM*) 2nd Edition, pages 5-1 to 5-13. • Sample of relevant Question Pool questions. • Have examples of transceivers; microphones; straight keys; keyer; keyboard; handheld transceiver; power supply • Set up a working transceiver • Laptop computer and projector
Recommended Strategy: • Introduce any other instructor(s) who will join you for this lesson. • Introduce topic of basic station equipment and set-up. It's probably the one topic that you have been waiting for. We will learn that you don't need to spend a huge amount of money to get into the hobby. • Keep in mind that your class will probably consist of people of varying levels of understanding of physical science. Keep your discussion as basic as possible. • From the background information on the students that you collected, see if are there any students in the group who have a science/technology background who can aid in instructing this lesson (i.e., teaching assistant). • Progress checks are embedded in the Lesson Topics so that you may periodically assess student learning and mastery of the Question Pool questions. The "stem" of the actual QP question is indicated as a question to pose to the class, as a group. Vary the students that you call upon to answer the questions as you pose them throughout the lesson. You will be able to monitor and measure learning in this manner.

Module Learning Objectives:

At the conclusion of this lesson, students will be able to:

5.1 Discuss the basic operation of transmitters and receivers, including basic features, modes, operating characteristics and band coverage, and the special features of handheld transceivers.
[T2B03; T4A01; T4B01; T4B02; T4B03; T4B04; T4B05; T4B06; T4B07; T4B08; T4B09; T4B10; T7A10; T7B01; T7C01; T8D10]

5.2 Discuss the digital modes and setup.
[T4A06; T4A07; T7B12; T8C11; T8D01; T8D02; T8D03; T8D06; T8D07; T8D08; T8D09; T8D11]

Lesson Topics

Topic	Notes
Discuss transmitters and receivers • Today we mostly use transceivers — a combination of transmitter and receiver in one box. Manufacturers like Yaesu, Kenwood, Icom, Elecraft, Ten-Tec, Alinco, etc. make a variety of models. They range from very basic models to mid-line to high-end. Higher prices bring better performance and more “bells-and-whistles.”	PPT Slide 11-2 Display several different kinds of transceivers. If possible, set up a working station and demonstrate operations on various modes and bands. It is helpful to “plant” a contact in case random contacts are not forthcoming during the class demonstration. Keep your demonstration as simple and reliable as possible. Keep your demonstration moving as well. Get students on the air whenever possible.
• Draw a block diagram of various station configurations (HF, VHF, digital, etc) on the board.	Show an example of each component of the station.
• Describe in detail how the individual components in a station are interconnected.	
• Discuss transceiver configurations – multi-band; dual-band; single band; hand-held	PPT Slides 11-3 to 11-8
Selecting a band, frequency and mode • Some radios allow you to enter your desired frequency by VFO dial or keypad. (T4B02).	PPT Slide 11-9 PPT Slide 11-10

• Amateurs use several different modes of operation from CW (Morse code); FM voice (simplex and via repeater); AM or SSB (USB or LSB); and data modes such as RTTY or packet radio. • License class limits band, mode and frequency use as well. We operate on the HF or VHF/UHF bands. • Some transceivers have memory channels to store those modes and frequencies that you will use often, maybe a “sked with a friend.” (T4B04).	PPT Slide 11-11 Compare and contrast various modes. Note the bandwidth requirements for each. Using a dummy load and monitoring receiver, demonstrate the amount of bandwidth required for each mode

Transmitter functions and adjustments
• Transmitters have several functions and controls in common.
  o They all permit you to vary the power output from the final RF amplifier. Some have continuously variable power output via a control knob. Others have fixed steps.
  o They all have a mic gain control. Some radios also have a speech processor or compressor that you can control to improve intelligibility.
  o Most radios also have a meter on the front panel where you can view measurements to help with adjusting things like power output or microphone gain.
• Spurious signals and interference
  o Adjusting your transmitter or antenna tuner while transmitting into an antenna can cause interference to other operators. When adjusting your equipment, transmit into a 50 ohm dummy load – not directly into your antenna. (T7C01).
  o “Splatter” from your transmitter that interferes with someone else’s conversation on a nearby frequency is spurious. Splatter might be caused by over-modulating your transmitter.
	Demonstrate various transmitter controls and adjustments.
	
	PPT Slide 11-12

o Over-modulation is caused by speaking too loudly or setting mic gain or speech compression too high (T4B01). o Over-deviating on FM is caused by speaking too loudly or too closely into the mic. (T7B01). o To help prevent over-modulating, the automatic level control (ALC) reduces output power as the transmitter's limit is reached. Adjust mic gain to stay within the ALC range.	PPT Slide 11-13
Microphones and keys • We use straight keys or paddles and electronic keyers for CW. • For voice, we use desk mics, hand mics or headsets. • For voice operation, the transmitter can be activated by PTT or VOX (explain). Transceiver mic connectors are likely to include PTT connections and supply voltage for powering electret type microphones. (T4A01). • Today computer software can also send CW via a keyboard (T8D10).	Have samples on hand to illustrate. PPT Slide 11-14 PPT Slide 11-15 PPT Slide 11-16
Receiver functions • All receivers will have an AF gain control which is simply a volume control. • All will have an automatic gain control (AGC) to adjust the receiver's sensitivity to strong and weak signals and thus keep output volume pretty consistent. • All FM and some SSB receivers will have a squelch control to allow you to suppress unwanted signal noise when no signal is present (T2B03; T4B03). • Transceivers will vary when it comes to bandwidth filtering. Some basics: o Wide filters (2.4 kHz) are for SSB reception (T4B09). o Narrow filters (500 Hz) are for CW and data (T4B10).	PPT Slide 11-17 PPT Slide 11-18 PPT Slide 11-19 PPT Slide 11-20

o Having multiple filters allows for versatility – you can select the type of filter best matched to the operating you are doing, Just enough bandwidth to pass the desired signal (T4B08).	Demonstrate the use of filters by setting up various interference scenarios (strong adjacent signals, noise, close signals, mixed modes, etc.).
• Receiver incremental tuning (RIT) is a function for fine tuning of SSB or CW signals. o You can vary the incoming receiver signal without moving off of a specific transmit frequency. (T4B07). o You can vary the exact receive frequency to adjust the pitch of the other operator's voice, or move away from some adjacent noise to best hear the incoming signal. (T4B06). • Noise blanker is another feature that "mutes" to a degree the noise on a frequency without blocking the signal entirely (T4B05).	
• S-meter (signal strength meter) displays the strength of incoming signal in S-units or decibels.	PPT Slide 11-21
• HF transceivers can cover ham-bands only or include general coverage receivers that work over a wide frequency range.	PPT Slide 11-22
Handheld transceivers • Handheld VHF/UHF FM transceivers are very popular with new hams and hams doing public service work. Most hams have one or more handhelds to keep in touch on the go.	PPT Slide 11-23
• Speaker mics, extra batteries, fast chargers and other options are available.	PPT Slide 11-24
• An external RF amplifier can to boost 5 W from a handheld to 50 W or more (T7A10).	Administer quiz based on above questions and debrief, or conduct progress check.

Progress Check	
Question Stem	**PowerPoint Slide**
1. Which of the following describes the muting of receiver audio controlled solely by the presence or absence of an RF signal? (T2B03)	PPT Slide 11-25
2. Which of the following is true concerning the microphone connectors on amateur transceivers? (T4A01)	PPT Slide 11-27
3. What may happen if a transmitter is operated with the microphone gain set too high? (T4B01)	PPT Slide 11-29
4. Which of the following can be used to enter the operating frequency on a modern transceiver? (T4B02)	PPT Slide 11-31
5 What is the purpose of a squelch control on a transceiver? (T4B03)	PPT Slide 11-33
6. What is a way to enable quick access to a favorite frequency on your transceiver? (T4B04)	PPT Slide 11-35
7. Which of the following would reduce ignition interference to a receiver? (T4B05)	PPT Slide 11-37
8. Which of the following controls could be used if the voice pitch of a single-sideband signal seems too high or low? (T4B06)	PPT Slide 11-39
9. What does the term “RIT” mean? (T4B07)	PPT Slide 11-41
10. What is the advantage of having multiple receive bandwidth choices on a multimode transceiver? (T4B08)	PPT Slide 11-43
11. Which of the following is an appropriate receive filter to select in order to minimize noise and interference for SSB reception? (T4B09)	PPT Slide 11-45

12. Which of the following is an appropriate receive filter to select in order to minimize noise and interference for CW reception? (T4B10)	PPT Slide 11-47
13. What device increases the low-power output from a handheld transceiver? (T7A10)	PPT Slide 11-49
14. What can you do if you are told your FM handheld or mobile transceiver is over deviating? (T7B01)	PPT Slide 11-51
15. What is the primary purpose of a dummy load? (T7C01)	PPT Slide 11-53
16. Which of the following can be used to transmit CW in the amateur bands? (T8D10)	PPT Slide 11-55

Lesson Topics	
Topic	**Notes**
Digital Communications Overview • Amateurs continue to improve on their digital mode operations – combining modulation with new protocols. Special codes and characters embedded in the stream of data allow the receiving modem to detect and sometimes correct errors. Very efficient communications medium. • A modem – modulator-demodulator – changes data signals to and from audio signals. A terminal node controller (TNC) uses a micro-processor together with a modem to perform the tasks. A multiple protocol controller (MPC) can perform several protocols. • Today most amateurs use a computer sound card and appropriate software to do the work of a TNC or MPC.	PPT Slide 11-57

• On HF, where SSB modulation is the norm, popular digital modes as radioteletype (RTTY), PSK31 and MFSK.
• On VHF/UHF, where FM is the standard, popular digital modes include packet radio and Winlink 2000. (T8D01)
• Errors in digital data - discuss
  o Bit error rate (BER) (T7B12)
  o Parity bit (T8D11)
	Consider bringing in local club members who specialize in the various digital modes discussed in the next section, or setting up a laptop computer to demonstrate some of the software used.

Amateur digital modes.
• Packet and packet networks
  o FSK bursts of data
  o 2 meter band mostly
  o ARQ protocol for errors (T8D08)
• Keyboard-to-keyboard
  o RTTY is oldest
  o PSK– phase-shift keying (T8D06)
  o PSK31 is a popular low rate data transmission mode (T8D07)
  o DigiPan PSK31 software
	PPT Slide 11-58

• APRS o A packet radio station with a Global Positioning System (GPS) receiver attached to a TNC. (T8D02; T8D03). • Winlink • Note: Even CW is a digital mode (T8D09).	PPT Slide 11-59
Setting up for digital modes • Note Figure 5-11 in HRLM. It illustrates the set-up for digital operations. • If your computer's sound card is used, its output is connected to the radio's mic input. The speaker is then connected to the sound card input. (T4A07). • A TNC is connected between the computer and the transceiver. (T4A06).	PPT Slide 11-60

• An Internet gateway (Figure 5-12 in HRLM) is a digital station that provides a connection to the Internet for data transmitted by Amateur Radio from other stations (T8C11). • Discuss D-STAR.	PPT Slide 11-61 Administer quiz based on above questions and debrief, or use progress check

Progress Check	
Question Stem	**PowerPoint Slide**
1. Which of the following would be connected between a transceiver and computer in a packet radio station? (T4A06)	PPT Slide 11-62
2. How is the computer's sound card used when conducting digital communications using a computer? (T4A07)	PPT Slide 11-64
3. What does the acronym "BER" mean when applied to digital communications systems? (T7B12)	PPT Slide 11-66
4. What name is given to an amateur radio station that is used to connect other amateur stations to the Internet? T8C11)	PPT Slide 11-68
5. Which of the following is an example of a digital communications method? (T8D01)	PPT Slide 11-70
6. What does the term APRS mean? (T8D02)	PPT Slide 11-72
7. Which of the following is normally used when sending automatic location reports via amateur radio? (T8D03)	PPT Slide 11-74
8. What does the abbreviation PSK mean? (T8D06)	PPT Slide 11-76
9. What is PSK31? (T8D07)	PPT Slide 11-78
10. Which of the following may be included in packet transmissions? (T8D08)	PPT Slide 11-80

12. What code is used when sending CW in the amateur bands? T8D09)	PPT Slide 11-82
13. What is a “parity” bit? (T8D11)	PPT Slide 11-84

Demonstrations & Suggested Activities

- Set up a laptop computer to demonstrate various digital modes and software used.
- If a transceiver and antenna are available, tune past various digital signals so that students can identify the sound of popular modes such as RTTY, PSK31 and packet radio.
- Alternatively, have available audio recordings of various digital mode signals.

Homework Suggestions to Reinforce Lesson Materials:

- Study lesson material and review test items pertaining to Module 11, *ARRL Ham Radio License Manual* (2nd Edition, pages 5-1 to 5-13.
- Read Chapter 5 in *ARRL Ham Radio License Manual* (2nd Edition), pages 5-14 to 5-24 in preparation for the next lesson.
- Introduce students to the books, *The ARRL RFI Book* and *ARRL’s HF Digital Handbook* both available through the ARRL Bookstore.

Question Pool – Applicable Questions to Chapter 5 – *HRLM*:

Module 11, Chapter 5
T2B03; T4A01; T4A06; T4A07; T4B01; T4B02; T4B03; T4B04; T4B05; T4B06; T4B07; T4B08; T4B09; T4B10; T7A10; T7B01; T7B12; T7C01; T8C11; T8D01; T8D02; T8D03; T8D06; T8D07; T8D08; T8D09; T8D10; T8D11

Module 12 – Lesson Plan

Power Supplies and RF Interference

Applicable Chapter: Chapter 5
Suggested Lesson Length: 2 Hours
Study & Lesson Materials: • *ARRL Ham Radio License Manual* (*HRLM*) 2nd Edition, pages 5-1 to 5-24. • Sample of relevant Question Pool questions. • Have examples of power supplies and batteries • Have examples of different kinds of ferrite chokes and RFI filters • Laptop computer and projector
Recommended Strategy: • Introduce any other instructor(s) who will join you for this lesson. • This lesson continues on the topic of basic station equipment and set-up. This time we'll discuss power supplies and RF interference issues. • Keep in mind that your class will probably consist of people of varying levels of understanding of physical science. Keep your discussion as basic as possible. • From the background information on the students that you collected, see if are there any students in the group who have a science/technology background who can aid in instructing this lesson (i.e., teaching assistant). • Progress checks are embedded in the Lesson Topics so that you may periodically assess student learning and mastery of the Question Pool questions. The "stem" of the actual QP question is indicated as a question to pose to the class, as a group. Vary the students that you call upon to answer the questions as you pose them throughout the lesson. You will be able to monitor and measure learning in this manner.

Module Learning Objectives:

At the conclusion of this lesson, students will be able to:

5.3 Discuss the basics of power supplies and batteries.
[T4A03; T4A10; T4A11; T5A06; T6A10; T6A11; T6D05; T7B09; T0A08; T0A09; T0A10]

5.4 Discuss RF interference symptoms and cures.
[T4A04; T4A05; T4A09; T7B02; T7B03; T7B04; T7B05; T7B06; T7B07; T7B08]

5.5 Discuss RF grounding.
[T4A08; T7B11]

Lesson Topics	
Topic	**Notes**
Power supplies and batteries – discuss	PPT Slide 12- 2
• Amateurs use various kinds of home-brew and commercial power supplies. Most important to remember is to check your radio and equipment manuals and be sure that your power supply can supply adequate voltage and current for your equipment (T5A06).	Show examples of linear and switching power supplies
• Power supplies – discuss o Linear versus switching supplies o Some power supplies are regulated so as to provide constant voltage as current demands change (T6D05; T4A03).	PPT Slide 12-3 PPT Slide 12-4
• Mobile power wiring – discuss o Modern automobiles are negative ground; transceiver connections to the battery (T4A11). o Alternator whine can be corrected with dc power filters (T4A10; T7B09).	PPT Slide 12-5
• Generators and inverters – discuss o Inverters convert dc into ac. ▪ Square, triangle, sine-wave inverters. o Generators create ac. ▪ Gas powered. ▪ Voltage and current ratings. ▪ Special precautions.	
• Batteries – discuss o Disposable o Rechargeable o Storage o Charging ▪ The nominal voltage of a fully charged nickel-cadmium cell is 1.2 V (T6A10) ▪ A carbon-zinc battery is not rechargeable (T6A11).	PPT Slide 12-6 Pass around batteries PPT Slide 12-7

▪ An automobile battery can be recharged by running the car engine – and thus is an emergency backup. Discuss hazards while charging (T0A08; T0A09; T0A10). o Batteries for handheld radios - discuss	PPT Slide 12-8

Progress Check	
Question Stem	**PowerPoint Slide**
1. Which is a good reason to use a regulated power supply for communications equipment? (T4A03)	PPT Slide 12-9
2. What is the source of a high-pitched whine that varies with engine speed in a mobile transceiver's receive audio? (T4A10)	PPT Slide 12-11
3. Where should a mobile transceiver's power negative connection be made? (T4A11)	PPT Slide 12-13
4. How much voltage does a mobile transceiver usually require? (T5A06)	PPT Slide 12-15
5. What is the nominal voltage of a fully charged nickel-cadmium cell? (T6A10)	PPT Slide 12-17
6. Which battery type is not rechargeable? (T6A11)	PPT Slide 12-19
7. What type of circuit controls the amount of voltage from a power supply? (T6D05)	PPT Slide 12-21
8. What could be happening if another operator reports a variable high-pitched whine on the audio from your mobile transmitter? (T7B09)	PPT Slide 12-23
9. What is one way to recharge a 12-volt lead-acid station battery if the commercial power is out? (T0A08)	PPT Slide 12-25

10. What kind of hazard is presented by a conventional 12-volt storage battery? (T0A09)	PPT Slide 12-27
11. What can happen if a lead-acid storage battery is charged or discharged too quickly? (T0A10)	PPT Slide 12-29

Lesson Topic	
Topic	**Notes**
RF interference (RFI) – discuss • Amateur Radio operators should be aware that their transmissions can interfere with electronic devices in their homes and in their neighbors' homes.	PPT Slide 12-31
• RFI can be caused by fundamental overload, harmonics, and/or spurious emissions. It can be eliminated by snap-on ferrite chokes, low-pass or high-pass filters, and/or band-reject and band-pass filters. (T7B03; T7B07).	Pass around samples of filters and ferrite chokes
• Filters – discuss o Filters help prevent unwanted signals from being transmitted and keep unwanted signals from being received. Note HRLM Figure 5-15 for several filter applications. Discuss: ▪ AC power line filters ▪ Feed line filters ▪ RF choke or common-mode filters ▪ Ferrite chokes (T4A09).	PPT Slide 12-32
• Direct detection – discuss o Direct detection is the most common form of interference to telephones since telephones are not designed to reject RF signals (T7B04).	PPT Slide 12-33
o Low-pass filters connected to the telephone's modular jack are the best way to reduce RFI from direct detection (T7B05).	Show a telephone filter

• Overload – discuss
  o Very strong signals may overwhelm a receiver's ability to reject them. This is called fundamental overload (T7B02).
  o A first step in attempting to eliminate RFI from a 2 meter transceiver into a nearby TV is to install a notch filter. (T4A05).	

• Cable television interference -- discuss	PPT Slide 12-34
• Harmonics and spurious emissions – discuss o To prevent harmonics from being radiated, a low-pass or band-pass filter must be installed at the transmitter's connection to the antenna feed line (T4A04).	
• Noise sources -- discuss	PPT Slide 12-35
• Unknown signals – discuss direction finding.	
• Resolving interference problems o Guidelines – eliminate interference at home! (T7B06).	PPT Slide 12-36
	o Discuss various interference scenarios involving consumer electronics devices. Demonstrate how and where to install high and low pass filters. o Be a politically wise neighbor!	PPT Slide 12-37

• Part 15 rules – discuss
  o Good to know – consumer electronics goods that radiate unwanted RFI that interfere with licensed Amateur Radio is the responsibility of the consumer goods owner;
  o That same consumer electronics devise must accept RFI from the licensed Amateur Radio Station. (T7B08).
	PPT Slide 12-38

Progress Check	
Question Stem	**PowerPoint Slide**
1. Where must a filter be installed to reduce harmonic emissions? (T4A04)	PPT Slide 12-39
2. What type of filter should be connected to a TV receiver as the first step in trying to prevent RF overload from a nearby 2 meter transmitter? (T4A05)	PPT Slide 12-41
3. Which would you use to reduce RF current flowing on the shield of an audio cable? (T4A09)	PPT Slide 12-43
4. What is meant by fundamental overload in reference to a receiver? (T7B02)	PPT Slide 12-45
5. Which of the following may be a cause of radio frequency interference? (T7B03)	PPT Slide 12-47
6. What is the most likely cause of interference to a non-cordless telephone from a nearby transmitter? (T7B04)	PPT Slide 12-49
7. What is a logical first step when attempting to cure a radio frequency interference problem in a nearby telephone? (T7B05)	PPT Slide 12-51
8. What should you do first if someone tells you that your station's transmissions are interfering with their radio or TV reception? (T7B06)	PPT Slide 12-53
9. Which of the following may be useful in correcting a radio frequency interference problem? (T7B07)	PPT Slide 12-55
10. What should you do if a "Part 15" device in your neighbor's home is causing harmful interference to your amateur station? (T7B08)	PPT Slide 12-57

Lesson Topic	
Topic	**Notes**
RF grounding – discuss • RF grounding is important. It helps keep audio distortion, erratic computer operations, and occasional RF burns to a minimum. • RF feedback via a microphone cable can cause distorted transmitted audio (T7B11). • A solid copper strip is best for grounding because it presents the lower impedance to RF current. (T4A08).	PPT Slide 12-59

Progress Check	
Question Stem	**PowerPoint Slide**
1. What is a symptom of RF feedback in a transmitter or transceiver? (T7B11)	PPT Slide 12-60
2. What type of conductor is best to use for RF grounding? (T4A08)	PPT Slide 12-62

Demonstrations & Suggested Activities

- Show how ferrites or filters can eliminate or reduce interference to consumer electronics.
- Show how to use a split-core ferrite.

Homework Suggestions to Reinforce Lesson Materials:

- Study lesson material and review test items pertaining to Lesson Module 12, pp 5-14 to 5-24.
- Read Chapter 6 in *ARRL Ham Radio License Manual* (2nd Edition), pages 6-1 to 6-20 in preparation for the next lesson.
- Refer students to the books, *The ARRL RFI Book* and *ARRL's HF Digital Handbook* both available through the ARRL Bookstore.

- Also refer students to information about RFI on the ARRL Web site at: **www.arrl.org/radio-frequency-interference-rfi**

Question Pool – Applicable Questions to Chapter 5 – *HRLM*:

Module 11, Chapter 5
T2B03; T4A01; T4A06; T4A07; T4B01; T4B02; T4B03; T4B04; T4B05; T4B06; T4B07; T4B08; T4B09; T4B10; T7A10; T7B01; T7B12; T7C01; T8C11; T8D01; T8D02; T8D03; T8D06; T8D07; T8D08; T8D09; T8D10; T8D11

Module 12, Chapter 5
T4A03; T4A04; T4A05; T4A08; T4A09; T4A10; T4A11; T5A06; T6A10; T6A11; T6D05; T7B02; T7B03; T7B04; T7B05; T7B06; T7B07; T7B08; T7B09; T7B11; T0A08; T0A09; T0A10

Module 13 – Lesson Plan

Communicating with other Hams:

Contact Basics; Band Plans; Making Contacts; Using Repeaters

Applicable Chapter: Chapter 6
Suggested Lesson Length: 2 Hours
Study & Lesson Materials: • *ARRL Ham Radio License Manual* (*HRLM*) 2nd Edition, pages 6-1 to 6-20. • Grid locator map • Log book or computer logging software • QSL cards • Band plan chart • *ARRL Repeater Directory* • Laptop computer and projector
Recommended Strategy: • Introduce any other instructors who will join you for this lesson. • This is a good lesson to bring in other members from the local club who can assist and discuss basics and protocols of amateur radio contacts. The prospective hams can get to recognize names, calls and faces of other amateurs in the community and know who to turn to with questions. • Review the resource on Operating Ethics available on the Instructor Resource Web page at **www.arrl.org/resources-for-license-instruction**. You may want to incorporate some of this content in your instruction. • Progress checks are embedded in the Lesson Topics so that you may periodically assess student learning and mastery of the Question Pool questions. The “stem” of the actual QP question is indicated as a question to pose to the class, as a group. Vary the students that you call upon to answer the questions as you pose them throughout the lesson. You will be able to monitor and measure learning in this manner.

Module Learning Objectives:

At the conclusion of this lesson, students will be able to:

6.1 Describe contact basics.
[T2B10; T2B11; T8C05]

6.2. Discuss band plans.
[T2B01]

6.3. Describe making contacts.
[T2A02; T2A04; T2A05; T2A08; T2A09; T7B10]

6.4. Discuss using repeaters.
[T1A11; T2A01; T2A03; T2B02; T2B04; T4B11; T8C09; T8C10]

Lesson Topics

Topic	Notes
Contact basics.	
• Describe a basic radio contact. It can be as simple as an exchange of call signs and signal reports or names.	PPT Slide 13-2 PPT Slide 13-3
• However, there are general principles – call them “radio manners” that all are expected to demonstrate within the fraternity of ham radio.	PPT Slide 13-4
• What makes for good radio manners and communication practices is somewhat similar to any other form of communication. o Speak clearly and slowly o Only talk one at a time o Use radio phonetics as appropriate (refer students to Table 6-1 in *HRLM*). o Identify your station frequently – remember FCC 10 minute rule.	PPT Slide 13-5
• Using a frequency o Frequencies are shared – no one “owns” a frequency o Some hams arrange “skeds” or like to hang out on a frequency	

• Signal reports – an important convention
  o RST system – see Table 6-2 in *HRLM*. Discuss this in detail.
  o Mention Q-Signals (Table 6-3 in *HRLM*). (T2B10; T2B11)
• Power levels. FCC rules state – "as low as possible for effective communications." CW requires less power than SSB. Define QRP.
	PPT Slide 13-6

• Locators and grid squares as a method of establishing location. (T8C05)	Show a grid locator map
• What is appropriate to discuss on the air? • Signing off. • Advising and assisting – the spirit of the hobby. Ask for help when needed, offer help when asked. • Radio and antenna checks – the appropriate process is to listen first and then ask if frequency is in use. At least twice.	
• Discuss the Official Observer (OO) program. We police our own in coordination with the FCC.	PPT Slide 13-7
• Logging contacts – no longer FCC rule, but important for award purposes. Mention QSL cards.	Show sample log book or logging software and a variety of QSL cards.
Band Plans. • Definitions and finding band plans	PPT Slide 13-8
• Goes beyond FCC designations of kinds of emissions by license class. They are voluntary agreements during normal conditions.	
• Discuss DX windows, digital mode windows; beacons; QRP windows; satellite; simplex (T2B01); repeater frequencies.	Display a band plan chart.
• Calling frequencies – important to know – especially 2 m/6 m/70 cm	
• Following band plans is a good practice.	Administer quiz based on above questions and debrief

Progress Check	
Question Stem	**PowerPoint Slide**
1. What is the term used to describe an amateur station that is transmitting and receiving on the same frequency? (T2B01)	PPT Slide 13-9
2. What is the “Q” signal used to indicate that you are receiving interference from other stations? (T2B10)	PPT Slide 13-11
3. What is the “Q” signal used to indicate that you are changing frequency? (T2B11)	PPT Slide 13-13
4. What is a grid locator? (T8C05)	PPT Slide 13-15

Lesson Topics	
Topic	**Notes**

Making Contacts.
• Before you transmit make sure you are on a frequency and in a mode that you are licensed to use.
• Repeater contacts. Be familiar with repeater protocols. This is a good time to allow the club repeater committee representative to discuss and demonstrate.
  o To establish a contact on a repeater when it is not in use – simply say your call (T2A09).
  o If you want to respond to a station that puts out a call, simply say KZ1Z, this is K1ZN. (T2A04).
  o Practice using your handheld so you are confident on the air.
  o Frequent problems experienced by new amateurs include distorted audio caused by being off frequency slightly, or even low batteries (T7B10).
• On the HF, using CW or SSB, establishing a contactl is done by the traditional calling of CQ – meaning “I am calling any station.” (T2A08).
	PPT Slide 13-17

o To answer a CQ, state the other operator's call, then your call, twice, and if necessary, phonetically. (T2A05). • Taking turns and breaking in – discuss rag chews and round tables. • Discuss nets. • What is a simplex channel? o On 2 meters the National Simplex Channel is 146.52 MHz and on 70 cm it is 446.0 MHz (T2A02).	PPT Slide 13-18

Progress Check	
Question Stem	**PowerPoint Slide**
1. What is the national calling frequency for FM simplex operations in the 70 cm band? (T2A02)	PPT Slide 13-19
2. What is an appropriate way to call another station on a repeater if you know the other station's call sign? (T2A04)	PPT Slide 13-21
3. What should you transmit when responding to a call of CQ? (T2A05)	PPT Slide 13-23
4. What is the meaning of the procedural signal "CQ?" (T2A08)	PPT Slide 13-25
5. What brief statement is often used in place of "CQ" to indicate that you are listening on a repeater? (T2A09)	PPT Slide 13-27
6. What might be the problem if you receive a report that your audio signal through the repeater is distorted or unintelligible? (T7B10)	PPT Slide 13-29

Lesson Topics	
Topic	**Notes**
Using Repeaters.	
• Discuss repeaters and how they operate.	PPT Slides 13-31 and 13-32
• Discuss simplex versus duplex,	PPT Slides 13-33 and 13-34
• What you need to know to access repeater – input and output frequency and split	PPT Slides 13-35 and 13-36
• Discuss repeater offsets (“splits”) (T4B11) and list common offsets (T2A01; T2A03).	PPT Slide 13-37
• Discuss repeater access tones and the reasons for them. o Discuss PL/CTCSS (T2B02). o Using the correct access tone (T2B04).	PPT Slides 13-38 and 13-39
• ID and control topics – time-out timer, courtesy tone	PPT Slide 13-40
• Finding repeaters.	Display *an ARRL Repeater Directory*.
• Repeater systems provide connectivity throughout states and regions. o Using auxiliary stations and remote receivers to increase regional coverage (T1A11).	
• Autopatches –still in use.	
• Private and special use repeaters.	
• Digital repeater systems. o Discuss VoIP o Discuss IRLP (T8C10) o Echolink o WIRES II o D-Star	
o How to find repeaters with VoIP capability (T8C09)	Administer quiz based on above questions and debrief

Progress Check	
Question Stem	**PowerPoint Slide**
1. Which of the following stations transmits signals over the air from a remote receive site to a repeater for retransmission? (T1A11)	PPT Slide 13-41
2. What is the most common repeater frequency offset in the 2 meter band? (T2A01)	PPT Slide 13-43
3. What is a common repeater frequency offset in the 70 cm band? (T2A03)	PPT Slide 13-45
4. What term is used to describe the use of a sub-audible tone transmitted with normal voice audio to open the squelch of a receiver? (T2B02)	PPT Slide 13-47
5. Which of the following common problems might cause you to be able to hear but not access a repeater even when transmitting with the proper offset? (T2B04)	PPT Slide 13-49
6. Which of the following describes the common meaning of the term “repeater offset?” (T4B11)	PPT Slide 13-51
7. How might you obtain a list of active nodes that use VoIP? (T8C09)	PPT Slide 13-53
8. How do you select a specific IRLP node when using a portable transceiver? (T8C10)	PPT Slide 13-54

Demonstrations & Suggested Activities

- Develop one or more practice tests using the Question Bank for this lesson. Allow students to take test after you complete lecture portion of lesson, above. Go over each test, as a group, using question answers as material to reinforce lecture.
- Time permitting, set-up scenarios where students can practice making contacts.
- Ask mentors to allow students to make contacts on mentors' stations.

Homework Suggestions to Reinforce Lesson Materials:

- Students are asked to study lesson materials HRLM pp 6-1 to 6-20, and they should study applicable sample questions, as indicated in HRLM.
- Read balance of Chapter 6 in *ARRL Ham Radio License Manual* (2nd Edition), pages 6-20 to 6-35 in preparation for the next lesson.
- Familiarize students with the book publications, *The ARRL Operating Manual*, *The Complete DXer*, by Bob Locher W9KNI and the *ARRL Repeater Directory*. All are available through the ARRL Bookstore.

Question Pool – Applicable Questions to Chapter 6 – *HRLM*:

Module 13, Chapter 6
T1A11; T2A01; T2A02; T2A03; T2A04; T2A05; T2A08; T2A09; T2B01; T2B02; T2B04; T2B10; T2B11; T4B11; T7B10; T8C05; T8C09; T8C10

Module 14, Chapter 6
T1A06; T1A07; T2C01;T2C04; T2C05; T2C06; T2C07; T2C08; T2C09; T2C10; T2C11; T7A09; T8B01; T8B02; T8B03; T8B04; T8B05; T8B06; T8B07; T8B08; T8B09; T8B10; T8B11; T8C01; T8C02; T8C03; T8C04; T8C07; T8C08; T8D04

Module 14 – Lesson Plan

Communicating with Other Hams:

Nets; Emergency Communications; Special Activities, Modes and Techniques

Applicable Chapter: Chapter 6

Suggested Lesson Length: 2 Hours

Study & Lesson Materials:

- *ARRL Ham Radio License Manual* (*HRLM*) 2nd Edition, pages 6-20 to 6-35.
- Laptop computer and projector
- Grid square map
- Radiogram forms
- ARRL Online Net Directory (**www.arrl.org/arrl-net-directory-search**)
- Satellite tracking program
- Video or photos from your local club's ARRL Field Day setup.

Recommended Strategy:

- Introduce any other instructors who will join you for this lesson.

- This is a good lesson to bring in other members from the local club who can assist and discuss emergency communications, nets, DXing and contesting or other ham radio activities. The prospective hams can get to recognize names, calls and faces of other amateurs in the community and know who to turn to with questions.

- Progress checks are embedded in the Lesson Topics so that you may periodically assess student learning and mastery of the Question Pool questions. The "stem" of the actual QP question is indicated as a question to pose to the class, as a group. Vary the students that you call upon to answer the questions as you pose them throughout the lesson. You will be able to monitor and measure learning in this manner.

Module Learning Objectives:

At the conclusion of this lesson, students will be able to:

6.5 Describe nets.
[T2C06; T2C07; T2C08; T2C10; T2C11]

6.6 Describe Emergency Communications.
[T2C01; T2C04; T2C05; T2C09]

6.7 Describe special activities, modes and techniques.
[T1A06; T1A07; T7A09; T8B01; T8B02; T8B03; T8B04; T8B05; T8B06; T8B07; T8B08; T8B09; T8B10; T8B11; T8C01; T8C02; T8C03; T8C04; T8C07; T8C08; T8D04]

Lesson Topics	
Topic	**Notes**
Nets – Great places to learn the ropes!	PPT Slide 14-2
• Several types of nets for different purposes**.**	
o Social – YLs (explain this term); Navy Chiefs; RVs; DX; county hunting, etc	
o Traffic – Discuss National Traffic system (NTS)	PPT Slide 14-3
o Emergency and public service	PPT Slide 14-4
• Net structure and participation. If a local net control operator (NCS) or ham who frequents nets is available, have that operator handle this section.	PPT Slide 14-5
o Discuss how to properly check into a net.	
o Discuss protocols once you have checked in (T2C07).	
o Make sure to cover processes for priority/emergency access to the net control operator (T2C06).	
o Traffic handling protocols.	
▪ Radiograms (T2C08); Preambles to Radiogram (T2C10); and Check (T2C11).	PPT Slide 14-6 Pass around Radiogram forms
• Finding nets.	Access ARRL Online Net Directory (**www.arrl.org/arrl-net-directory-search**) or have printout for local nets

Progress Check	
Question Stem	**PowerPoint Slide**
1. Which of the following is common practice during net operations to get the immediate attention of the net control station when reporting an emergency? (T2C06)	PPT Slide 14-7
2. What should you do to minimize disruptions to an emergency traffic net once you have checked in? (T2C07)	PPT Slide 14-9
3. What is usually considered to be the most important job of an amateur operator when handling emergency traffic messages? (T2C08)	PPT Slide 14-11
4. What is the preamble in a formal traffic message? (T2C10)	PPT Slide 14-13
5. What is meant by the term “check” in reference to a formal traffic message? (T2C11)	PPT Slide 14-15

Lesson Topics	
Topic	**Notes**
Emergency Communications. – The most important reason why we are licensed. FCC 97.1. • Discuss how Amateur Radio can support emergency communications in the community. • Give recent examples, local and national, of Amateur Radio emergency communications (otherwise known as Emcomm).	PPT Slide 14-17

• Discuss ARES and RACES, the two largest Amateur Radio emergency response organizations (T2C04)
  o Amateur Radio Emergency Service (ARES) – sponsored by ARRL
  o Radio Amateur Civil Emergency Service (RACES) – uses amateur radio stations for emergency management or civil defense communications (T2C05).
	PPT Slide 14-18

• Discuss operating under emergency conditions
  o No idle chatter.
  o Don’t be part of the problem – assist; don’t become a victim.
  o Maintain your personal safety.
  o Maintain radio discipline.
  o Be accurate with information dissemination.
  o Protect personal information.
  o Don’t give out unauthorized information.
  o Don’t relay news reports for commercial newscasters.
  o Emergency communications always has priority in the Amateur Radio service.
• EMCOMM and your employer
  o Operating on behalf of, or at the direction of your employer, even when off-duty, is prohibited. If you have questions about what is permitted, check with your local ARES leadership.
	PPT Slide 14-19

• Discuss Emergency Declarations. In times of dire emergency the FCC may declare a temporary state of communications emergency. The particulars of such a declaration will be provided on the FCC Web site – **fcc.gov** or on the ARRL Web site. Avoid operating on or near frequencies used to provide disaster relief. • Discuss threats to life and property. The FCC recognizes the need for flexibility in an emergency. Part 97.403 states: “No provision of these rules prevents the use by an amateur station of any means of radiotelecommunication at its disposal to provide essential communications needs in connection with the immediate safety of human life and immediate protection of property when normal communication systems are not available.” (T2C09).	PPT Slide 14-20
o However, be advised that you are bound by FCC rules at all times – even if using your radio in support of a public safety agency. (T2C01).	PPT Slide 14-21

o Universal distress calls – “Mayday” – SSB/phone; “SOS” – CW. o Discuss that Amateur Radio stations may communicate with stations in other radio services during an emergency. • Discuss public service communications. • Give examples of the different types of message traffic that might be passed over Amateur Radio. • Discuss tactical communications. o Special events – races; picnics; community events. We relay positions; help route traffic; etc. • Discuss identifying and packing an emergency equipment case (“go-kit”). • Discuss emergency communications training. You might want to get further into this aspect of the hobby. o FEMA free courses. o EMCOMM online ARRL courses.	PPT Slide 14-22 PPT Slide 14-23 PPT Slide 14-24 Administer quiz based on above questions and debrief

Progress Check	
Question Stem	**PowerPoint Slide**
1. What set of rules applies to proper operation of your station when using amateur radio at the request of public service officials? (T2C01)	PPT Slide 14-25
2. What do RACES and ARES have in common? (T2C04)	PPT Slide 14-27
3. What is the Radio Amateur Civil Emergency Service? (T2C05)	PPT Slide 14-29
4. When may an amateur station use any means of radio communications at its disposal for essential communications in connection with immediate safety of human life and protection of property? (T2C09)	PPT Slide 14-31

Lesson Topics	
Topic	**Notes**
Special activities, modes and techniques	
Ask members of the local club who are into DXing, awards and contesting to speak on this aspect of the hobby.	PPT Slide 14-33
• Awards for contacts with specific areas o Special mention of VHF/UHF DXing and the need for a multi-mode transceiver, capable of SSB/CW for that purpose. (T7A09).	PPT Slide 14-34 Show WAS or DXCC award
• DXing – contacting stations far away. Usually means stations in other countries on HF.	PPT Slide 14-35

• Contesting – the competitive edge of the hobby.
  o Competitors try to make as many (short contacts) in a fixed, specified period of time (T8C03).
  o Each contest has a specific exchange of information requirement (give examples: call sign and grid square or call sign and sequence number) (T8C04).
  o Discuss the value of contests for building operator skill.
  o Can participate individually or with a group
	PPT Slide 14-36

• Field Day – operating outside and using portable power. Builds operator skills for emergency communications and has a competitive element.	PPT Slide 14-37
• Special events – commemorate significant local events	PPT Slide 14-38

• A popular activity is radio direction-finding (DFing), using FM.
  o This is useful for tracking interference and noise. (T8C01)
  o A directional antenna helps pinpoint the target (T8C02).
  o DFing is also a good emergency operations skill – search & rescue.
	PPT Slide 14-39

Satellites – discuss • Amateurs have built more than 50 satellites since 1961. They are launched when extra space is available in a NASA expedition. • A ham can use a satellite to relay signals between far away countries if the satellite is high enough over earth (T8B03). • Discuss special equipment and antennas that are needed to operate satellites. • Mention ham radio on the International Space Station (T8B04).	PPT Slide 14-40

• Amateurs communicate using satellites by transmitting on an uplink frequency (T8B01).
• Terms for you to know:
  o Beacon – a signal from a satellite containing information about that satellite (T8B05).
  o Doppler shift – a shift in a signal's frequency due to the relative motion between the satellite and the Earth station (T8B07).
  o LEO - low earth orbit (T8B10).
	PPT Slide 14-41

o Spin fading – Signal fading caused by rotation of the satellite and its antennas (T8B09). o Pacsat – a satellite equipped with FM packet radio for digital communications. (T8B11).	PPT Slide 14-42
• Satellite tracking programs provide information on satellites and when they are in a position where you can access them (T8B06). • Operational modes of a satellite are the bands on which it is transmitting and receiving. For example, the uplink for a satellite in the U/V mode is in the UHF band (70 cm), and a downlink in the VHF band (T8B08). • Always use the lowest practical power to transmit to a satellite, since its relay transmitter power is limited by solar panels and batteries (T8B02).	Demonstrate satellite tracking program

Special modes.
• Visual modes. Discuss the capabilities of these modes.
  o SSTV – slow-scan TV. Popular frequencies are 14.230 MHz.
  o ATV – amateur TV. Used on UHF. The ATV fast-scan color TV signal is the same as analog broadcast TV (T8D04).
	PPT Slide 14-43

• Radio control.
  o Discuss telecommand signals and telemetry (T1A06; T1A07)
  o Amateurs may transmit telecommand signals up to 1 watt. (T8C07).
  o Call signs, name and address must be displayed on the RC transmitter (T8C08).
	PPT Slide 14-44
	
	Administer quiz based on above questions and debrief

Progress Check	
Question Stem	**PowerPoint Slide**
1. What is the FCC Part 97 definition of telecommand? (T1A06)	PPT Slide 14-45
2. What is the FCC Part 97 definition of telemetry? (T1A07)	PPT Slide 14-47
3. Which of the following devices is most useful for VHF weak-signal communication? (T7A09)	PPT Slide 14-49
4. Who may be the control operator of a station communicating through an amateur satellite or space station? (T8B01)	PPT Slide 14-51
5. How much transmitter power should be used on the uplink frequency of an amateur satellite or space station? (T8B02)	PPT Slide 14-53
6. Which of the following can be done using an amateur radio satellite? (T8B03)	PPT Slide 14-55

7. Which amateur stations may make contact with an amateur station on the International Space Station using 2 meter and 70 cm band amateur radio frequencies? (T8B04)	PPT Slide 14-57
8. What is a satellite beacon? (T8B05)	PPT Slide 14-59
9. What can be used to determine the time period during which an amateur satellite or space station can be accessed? (T8B06)	PPT Slide 14-61
10. With regard to satellite communications, what is Doppler shift? (T8B07)	PPT Slide 14-63
11. What is meant by the statement that a satellite is operating in “mode U/V?” (T8B08)	PPT Slide 14-65
12. What causes “spin fading” when referring to satellite signals? (T8B09)	PPT Slide 14-67
13. What do the initials LEO tell you about an amateur satellite? (T8B10)	PPT Slide 14-69
14. What is a common used method of sending signals to and from a digital satellite? (T8B11)	PPT Slide 14-71
15. Which of the following methods is used to locate sources of noise interference or jamming? (T8C01)	PPT Slide 14-73
16. Which of these items would be useful for a hidden transmitter hunt? (T8C02)	PPT Slide 14-75
17. What popular operating activity involves contacting as many stations as possible during a specified period of time? (T8C03)	PPT Slide 14-77
18. Which of the following is good procedure when contacting another station in a radio contest? (T8C04)	PPT Slide 14-79
19. What is the maximum power allowed when transmitting telecommand signals to radio controlled models? (T8C07)	PPT Slide 14-81

20. What is required in place of on-air station identification when sending signals to a radio control model using amateur frequencies?(T8C08)	PPT Slide 14-83
21. What type of transmission is indicated by the term NTSC? (T8D04)	PPT Slide 14-85

Demonstrations & Suggested Activities

- Develop one or more practice tests using the Question Bank for this lesson. Allow students to take test after you complete lecture portion of lesson, above. Go over each test, as a group, using question answers as material to reinforce lecture.

Homework Suggestions to Reinforce Lesson Materials:

- Study lesson materials and study applicable sample questions, as indicated in *HRLM*, pp 6-20 to 6-35.
- Search for the ARRL Section and local nets in your area.
- Identify the Section Manager (SM), Net Manager (NM) and Section Emergency Coordinator (SEC) for your section.
- Read Chapter 7 in *ARRL Ham Radio License Manual* (2nd Edition), pages 7-1 to 7-21 in preparation for the next lesson.
- Familiarize students with the publications, *The Emergency Communications Handbook*, and *The Satellite Handbook* by Steve Ford, WB8IMY. Both are available through the ARRL Bookstore.

Question Pool – Applicable Questions to Chapter 6 – *HRLM*:

Module 13, Chapter 6
T1A11; T2A01; T2A02; T2A03; T2A04; T2A05; T2A08; T2A09; T2B01; T2B02; T2B04; T2B10; T2B11; T4B11; T7B10; T8C05; T8C09; T8C10

Module 14, Chapter 6
T1A06; T1A07; T2C01;T2C04; T2C05; T2C06; T2C07; T2C08; T2C09; T2C10; T2C11; T7A09; T8B01; T8B02; T8B03; T8B04; T8B05; T8B06; T8B07; T8B08; T8B09; T8B10; T8B11; T8C01; T8C02; T8C03; T8C04; T8C07; T8C08; T8D04

Module 15 – Lesson Plan

License Terms and Working with the FCC

Applicable Chapter: Chapter 7
Suggested Lesson Length: 2 Hours
Study & Lesson Materials: • *ARRL Ham Radio License Manual* (*HRLM*) 2nd Edition, pages 7-1 to 7-10 • Samples of licenses and sample CSCE form • Form 605 • Laptop computer to access FCC Web site if Internet is available • *ARRL FCC Rules and Regulations for the Amateur Radio Service*
Recommended Strategy: • Introduce any other instructors who will join you for this lesson. • Keep in mind that your class will probably consist of people of varying levels of understanding of physical science. Keep your discussion as basic as possible. • From the background information on the students that you collected, see if are there any students in the group with a science/technology background who can aid in instructing this lesson (i.e., teaching assistant). • Discuss the overview of this lesson. Emphasize that the Technician class license requires a fundamental knowledge of licensing regulations, types of licenses, procedures to obtain a license and to upgrade a license, frequency and emission privileges, international laws and finally call signs. • Progress checks are embedded in the Lesson Topics so that you may periodically assess student learning and mastery of the Question Pool questions. The “stem” of the actual QP question is indicated as a question to pose to the class, as a group. Vary the students that you call upon to answer the questions as you pose them throughout the lesson. You will be able to monitor and measure learning in this manner.

Module Learning Objectives:

At the conclusion of this lesson, students will be able to:

7.1 Discuss license terms.
[T1A01; T1A02; T1A03; T1A10; T1C07; T1C08; T1C09; T1C10; T1C11; T1F13]

7.2 Discuss working with the FCC.

Discuss the role of ARRL and why membership is important.

Lesson Topics	
Topic	**Notes**
Discuss license terms.	
• Describe Part 97 (T1A03)	PPT Slide 15-2
• Discuss Part 97.1 – Basis and Purpose of Amateur Radio o "Recognition and enhancement of the value of the amateur service to the public as a voluntary noncommercial communication service, particularly with respect to providing emergency communications." o Add some discussion about, "Continuation and extension of the amateur's proven ability to contribute to the advancement of the radio art." o And, "Expansion of the existing reservoir within the amateur radio service of trained operators, technicians, and electronics experts." o And, "Amateur's ability to promote International goodwill."	PPT Slide 15-3
• Define who makes and enforces the rules for Amateur Radio: FCC (T1A02). • For whom is Amateur Radio intended? (T1A01). • Discuss the mission of Amateur Radio and how the ARRL supports this role. Use this opportunity to explain why membership in ARRL is important.	PPT Slide 15-4

• What is an Amateur Radio Station? (T1A10).
• Define types and classes of license.
  o Discuss combined operator and station license.
  o Discuss three classes: Technician; General and Amateur Extra. Compare and contrast privileges and requirements of each.
  o Mention “grandfathered” Novice and Advanced class licenses
	PPT Slide 15-5
	
	Show a sample Amateur Radio license

• Discuss examinations for licenses.
  o What is the Volunteer Examiner program?
  o What is a Volunteer Examination Coordinator?
  o Taking the exam
  ▪ What you need to know and bring.
  ▪ Must have two forms of ID – one with your picture.
  o Let’s discuss the CSCE and the Form 605.
  o Once you take and pass your first exam, when may you operate? (T1C10).
	PPT Slide 15-6
	
	Show samples of Form 605 and CSCE

• Discuss license term and renewal.
  o How long is the license good for? (T1C08).
  o The grace period. (T1C09; T1C11)
	PPT Slide 15-7

• Discuss responsibilities
  o Unauthorized operation.
  o Personal information that must be kept up-to-date in the FCC database - ULS. (T1C07).
  o Your FRN number and what it is.
  o Station inspection (T1F13).
	PPT Slide 15-8
	
	Administer quiz based on above questions and debrief

Progress Check	
Question Stem	**PowerPoint Slide**
1. For whom is the Amateur Radio Service intended? (T1A01)	PPT Slide 15-9
2. What agency regulates and enforces the rules for the Amateur Radio service in the United States? (T1A02)	PPT Slide 15-11
3. Which part of the FCC rules contains the rules and regulations governing the Amateur Radio Service? (T1A03)	PPT Slide 15-13
4. What is the FCC Part 97 definition of an amateur station? (T1A10)	PPT Slide 15-15
5. What may result when correspondence from the FCC is returned as undeliverable because the grantee failed to provide the correct mailing address? (T1C07)	PPT Slide 15-17
6. What is the normal term for an FCC issued primary station/operator license grant? (T1C08)	PPT Slide 15-19
7. What is the grace period following the expiration of an amateur license within which the license may be renewed? (T1C09)	PPT Slide 15-21
8. How soon may you operate a transmitter on an amateur radio service frequency after you pass the examination required for your first amateur radio license? (T1C10)	PPT Slide 15-23
9. If your license has expired and is still within the allowable grace period, may you continue to operate a transmitter on amateur service frequencies? (T1C11)	PPT Slide 15-25
10. When must the station licensee make the station and its records available for FCC inspection? (T1F13)	PPT Slide 15-27

Lesson Topics	
Topic	**Notes**
Discuss working with the FCC. • Illustrate and demonstrate the FCC ULS Web Site. • How to register on the ULS site. – CORES and the FRN • Using your FRN.	PPT Slide 15-29

Homework Suggestions to Reinforce Lesson Materials:

- Students should read and review *HRLM* pages 7-1 to 7-10.
- Students should read *HRLM* pages 7-10 to 7-21 in preparation for the next lesson
- Refer students to the books: *The ARRL Operating Manual*, and *ARRL FCC Rules and Regulations for the Amateur Radio Service*. Both books available through the ARRL Bookstore.

Question Pool – Applicable Questions to Chapter 7 – *HRLM*:

Module 15, Chapter 7
T1A01; T1A02; T1A03; T1A10; T1C07; T1C08; T1C09; T1C10; T1C11; T1F13

Module 16 – Lesson Plan

Bands and Privileges

Applicable Chapter: Chapter 7
Suggested Lesson Length: 1 Hour
Study & Lesson Materials: • *ARRL Ham Radio License Manual* (*HRLM*) 2nd Edition, pages 7-10 to 7-16 • *ARRL FCC Rules and Regulations for the Amateur Radio Service* • Band Plan Chart
Recommended Strategy: • Introduce any other instructors who will join you for this lesson. • Keep in mind that your class will probably consist of people of varying levels of understanding of physical science. Keep your discussion as basic as possible. • From the background information on the students that you collected, see if are there any students in the group with a science/technology background who can aid in instructing this lesson (i.e., teaching assistant). • Discuss the overview of this lesson. Emphasize that the Technician class license requires a fundamental knowledge of licensing regulations, types of licenses, procedures to obtain a license and to upgrade a license, frequency and emission privileges, international laws and finally call signs. • Progress checks are embedded in the Lesson Topics so that you may periodically assess student learning and mastery of the Question Pool questions. The “stem” of the actual QP question is indicated as a question to pose to the class, as a group. Vary the students that you call upon to answer the questions as you pose them throughout the lesson. You will be able to monitor and measure learning in this manner.

Module Learning Objectives: At the conclusion of this lesson, students will be able to: 7.3 Discuss Bands and Privileges. [T1A08; T1A09; T1B03; T1B04; T1B05; T1B06; T1B07; T1B08; T1B10; T1B11; T1C05; T2A10; T2A11; T8D05]

Lesson Topics	
Topic	**Notes**
Discuss bands and privileges.	
• Describe frequency privileges and Table 7-2, HRLM. (T1B03 to T1B07).	PPT Slide 16-2 PPT Slide 16-3
• Discuss emission privileges and Table 7-4. (T8D05; T1B10; T1B11).	PPT Slide 16-4 Hand out band plan charts.
• Discuss power limits. (T2A11).	
• Discuss the concept of primary and secondary allocations. (T1B08)	PPT Slide 16-5
• Internationally, discuss the need to ensure that both you and the station you are communicating with have the same privileges (T1C05).	
• Discuss band plans (T2A10).	
• Discuss repeater coordination.	
o What is a frequency coordinator? (T1A08; T1A09)	Administer quiz based on above questions and debrief

Progress Check	
Question Stem	**PowerPoint Slide**
1. Which of the following entities recommends transmit/receive channels and other parameters for auxiliary and repeater stations? (T1A08)	PPT Slide 16-6
2. Who selects a Frequency Coordinator? (T1A09)	PPT Slide 16-8
3. Which frequency is within the 6 meter band? (T1B03)	PPT Slide 16-10
4. Which amateur band are you using when your station is transmitting on 146.52 MHz? (T1B04)	PPT Slide 16-12
5. Which 70 cm frequency is authorized to a Technician Class license holder operating in ITU Region 2? (T1B05)	PPT Slide 16-14
6. Which 23 cm frequency is authorized for a Technician Class operator license? (T1B06)	PPT Slide 16-16

7. What amateur band are you using if you are transmitting on 223.50MHz? (T1B07)	PPT Slide 16-18
8. What do the FCC rules mean when an amateur frequency band is said to be available on a secondary basis? (T1B08)	PPT Slide 16-20
9. Which of the bands available to Technician Class operators have mode-restricted sub-bands? (T1B10)	PPT Slide 16-22
10. Which emission modes are permitted in the mode-restricted sub-bands at 50.0 to 50.1 MHz and 144.0 to 144.1 MHz? (T1B11)	PPT Slide 16-24
11. What must you do if you are operating on the 23 cm band and learn that you are interfering with a radiolocation station outside of the United States? (T1C05)	PPT Slide 16-26
12. What is a band plan, beyond the privileges established by the FCC? (T2A10)	PPT Slide 16-28
13. What are the FCC rules regarding power levels used in the amateur bands? (T2A11)	PPT Slide 16-30
14. Which of the following emission modes may be used by a Technician Class operator between 219 and 220 MHz? (T8D05)	PPT Slide 16-32

Homework Suggestions to Reinforce Lesson Materials:

- Students should read and review *HRLM* pages 7-10 to 7-16.
- Students should read *HRLM* pages 7-16 to 7-21 in preparation for the next lesson
- Refer students to the books: *The ARRL Operating Manual*, and *ARRL FCC Rules and Regulations for the Amateur Radio Service*. Both books available through the ARRL Bookstore.

Question Pool – Applicable Questions to Chapter 7 – *HRLM*:

Module 15, Chapter 7
T1A01; T1A02; T1A03; T1A10; T1C07; T1C08; T1C09; T1C10; T1C11; T1F13

Module 16, Chapter 7
T1A08; T1A09; T1B03; T1B04; T1B05; T1B06; T1B07; T1B08; T1B10; T1B11; T1C05; T2A10; T2A11; T8D05

Module 17– Lesson Plan

International Rules and Call Signs

Applicable Chapter: Chapter 7
Suggested Lesson Length: 1 Hour
Study & Lesson Materials: • *ARRL Ham Radio License Manual* (*HRLM*) 2nd Edition, pages 7-16 to 7-21 • US call district maps • QSL cards • ARRL FCC Rules and Regulations for the Amateur Radio Service
Recommended Strategy: • Introduce any other instructors who will join you for this lesson. • Keep in mind that your class will probably consist of people of varying levels of understanding of physical science. Keep your discussion as basic as possible. • From the background information on the students that you collected, see if are there any students in the group with a science/technology background who can aid in instructing this lesson (i.e., teaching assistant). • Discuss the overview of this lesson. Emphasize that the Technician class license requires a fundamental knowledge of licensing regulations, types of licenses, procedures to obtain a license and to upgrade a license, frequency and emission privileges, international laws and finally call signs. • Progress checks are embedded in the Lesson Topics so that you may periodically assess student learning and mastery of the Question Pool questions. The “stem” of the actual QP question is indicated as a question to pose to the class, as a group. Vary the students you call upon to answer questions as you pose them throughout the lesson. You will be able to monitor and measure learning in this manner.

Module Learning Objectives:

At the conclusion of this lesson, students will be able to:

7.4 Discuss International Rules.
[T1B01; T1B02; T1C03; T1C04; T1C06; T1D01]

7.5. Discuss Call Signs.
[T1C01; T1C02; T1F12; T8C06]

Lesson Topics	
Topic	**Notes**
Discuss international rules. • Describe the International Telecommunication Union (ITU) as the body that maintains international radio laws that all UN nations agree to abide by (T1B01). • Describe ITU regions – North and South America are Region 2 (T1B02). • Discuss the process for international operating. • Discuss the need to comply with the foreign country's requirements (T1C04). o Discuss the International Amateur Radio Permit (IARP) and CEPT list of countries. • Discuss maritime operations (T1C06). • Discuss permitted contacts and communications (T1D01; T1C03).	PPT Slide 17-2 Administer quiz based on above questions and debrief

Progress Check	
Question Stem	**PowerPoint Slide**
1. What is the ITU? (T1B01)	PPT Slide 17-3
2. North American amateur stations are located in which ITU region? (T1B02)	PPT Slide 17-5
3. What types of international communications are permitted by an FCC-licensed amateur station? (T1C03)	PPT Slide 17-7
4. When are you allowed to operate your amateur station in a foreign country? (T1C04)	PPT Slide 17-9
5. From which of the following may an FCC-licensed amateur station transmit, in addition to places where the FCC regulates communications? (T1C06)	PPT Slide 17-11

6. With which countries are FCC-licensed amateur stations prohibited from exchanging communications? (T1D01)	PPT Slide 17-13

Lesson Topics	
Topic	**Notes**
Discuss call signs. • US call signs – what they are made up of (T1C02). • US call sign districts. • License class and call sign. • Club call signs and requirements (T1F12). • Special event call signs (T1C01; T8C06).	PPT Slides 17-15 and 17-16 Use QSL cards to illustrate different kinds of call signs Pass out US call sign maps PPT Slide 17-17 Administer quiz based on above questions and debrief

Progress Check	
Question Stem	**PowerPoint Slide**
1. Which type of call sign has a single letter in both the prefix and suffix? (T1C01)	PPT Slide 17-18
2. Which of the following is a valid US amateur radio station call sign? (T1C02)	PPT Slide 17-20
3. How many persons are required to be members of a club for a club station license to be issued by the FCC? (T1F12)	PPT Slide 17-22
4. For what purpose is a temporary “1 by 1” format (letter-number-letter) call sign assigned? (T8C06)	PPT Slide 17-24

Homework Suggestions to Reinforce Lesson Materials:

- Students should read and review *HRLM* pages 7-16 to 7-21.
- Students should read *HRLM* pages 8-16 to 8-13 in preparation for the next lesson
- Refer students to the books: *The ARRL Operating Manual*, and *ARRL FCC Rules and Regulations for the Amateur Radio Service*. Both books available through the ARRL Bookstore.

Question Pool – Applicable Questions to Chapter 7 – *HRLM*:

Module 15, Chapter 7
T1A01; T1A02; T1A03; T1A10; T1C07; T1C08; T1C09; T1C10; T1C11; T1F13

Module 16, Chapter 7
T1A08; T1A09; T1B03; T1B04; T1B05; T1B06; T1B07; T1B08; T1B10; T1B11; T1C05; T2A10; T2A11; T8D05

Module 17, Chapter 7
T1B01; T1B02; T1C01; T1C02; T1C03; T1C04; T1C06; T1D01; T1F12; T8C06

Module 18 – Lesson Plan

Operating Regulations:

Control Operators; Station Identification; Third-Party Communications

Applicable Chapter: Chapter 8
Suggested Lesson Length: 1 Hour
Study & Lesson Materials: • *ARRL Ham Radio License Manual (HRLM)* 2nd Edition, pages 8-1 to 8-9 (sections 8.1, 8.2 and 8.4; section 8.3 will be covered in the next lesson). • Sample of relevant Question Pool questions. • Laptop computer and projector
Recommended Strategy: • Introduce any other instructors who will join you for this lesson. • Keep in mind that your class will probably consist of people of varying levels of understanding of physical science. Keep your discussion as basic as possible. • From the background information on the students that you collected, see if are there any students in the group with a science/technology background who can aid in instructing this lesson (i.e., teaching assistant). • Progress checks are embedded in the Lesson Topics so that you may periodically assess student learning and mastery of the Question Pool questions. The "stem" of the actual QP question is indicated as a question to pose to the class, as a group. Vary the students that you call upon to answer the questions as you pose them throughout the lesson. You will be able to monitor and measure learning in this manner.

Module Learning Objectives:

At the conclusion of this lesson, students will be able to:

8.1. Describe the requirements for control operators
[T1E01; T1E02; T1E03; T1E04; T1E05; T1E07; T1E11; T1F08]

8.2 Describe Amateur Radio station Identification procedures
[T1A05; T1D11; T1F01; T1F02; T1F03; T1F04; T1F05; T1F06; T1F07; T2A06; T2A07; T2B09]

8.4. Describe the rules and regulations for third-party communications [T1F11]

Lesson Topics	
Topic	**Notes**
Control operators – discuss FCC definitions • The control operator is an amateur designated as responsible for making sure that transmissions comply with FCC rules. (T1E01)	PPT Slide 18-2
• The control operator does not have to be present at the transmitter; but all amateur transmissions are the control operator's responsibility. • The station licensee is responsible for designating the control operator (T1E03) • Any FCC licensed amateur can be a control operator (T1E02) • The control point is where the station's control function is performed. The control point can be linked – remotely located and connected by phone lines, the Internet or radio link (T1E05) • A control operator can operate any way permitted by the privileges of one's license class (T1E04; T1F08).	PPT Slide 18-3
• Guest operating. Guest operators are also responsible for proper operation of the station while operating under the supervision of the control operator. (T1E07) • The FCC presumes that the station licensee is the control operator unless notified differently. (T1E11) • Unlicensed operators cannot operate as control operators, or be at the transmitter, unsupervised by a licensed operator.	PPT Slide 18-4 Administer quiz based on above questions and debrief

Progress Check	
Question Stem	**PowerPoint Slide**
1. When must an amateur station have a control operator? (T1E01)	PPT Slide 18-5
2. Who is eligible to be the control operator of an amateur station? (T1E02)	PPT Slide 18-7
3. Who must designate the station control operator? (T1E03)	PPT Slide 18-9
4. What determines the transmitting privileges of an amateur station? (T1E04)	PPT Slide 18-11
5. What is an amateur station control point? (T1E05)	PPT Slide 18-13
6. When the control operator is not the station licensee, who is responsible for the proper operation of the station? (T1E07)	PPT Slide 18-15
7. Who does the FCC presume to be the control operator of an amateur station, unless documentation to the contrary is in the station records? (T1E11)	PPT Slide 18-17
8. When may a Technician Class licensee be the control operator operating in an exclusive Extra Class operator segment of the amateur bands? (T1F08)	PPT Slide 18-19

Lesson Topics	
Topic	**Notes**
Identification – discuss proper procedures. • Unidentified transmissions are never allowed. (T2A06) • Speaking your call sign – such as for a quick on-air test, is fine. (T1D11) • The basic rule for on-air operating is to identify with your call sign at least once every ten minutes of operating time, and when the contact is finished. (T1F03; T2A07)	PPT Slide 18-21

• On phone contacts, the call sign identification must be in English, regardless of the language you are speaking to the other station. (T1F04) • The FCC emphasizes the use of phonetics to avoid confusion. (T2B09) • You may also identify by CW; even if you are using phone for the contact. (T1F05) • Tactical calls are provided for by the FCC; but not in place of assigned calls. (T1F01; T1F02) • Explain self-assigned indicators (i.e., KL7/K1ZN) (T1F06; T1F07) • Explain guest operation call sign procedures.	
• Discuss miscellaneous call sign identification procedures. o Remote control stations – no ID necessary. o Space stations – > 50km above Earth's surface – no ID (T1A05) o Special event call signs.	PPT Slide 18-22 Administer quiz based on above questions and debrief

Progress Check	
Question Stem	**PowerPoint Slide**
1. What is the FCC Part 97 definition of a space station? (T1A05)	PPT Slide 18-23
2. Which of the following types of communications are permitted in the Amateur Radio Service? (T1D11)	PPT Slide 18-25
3. What type of identification is being used when identifying a station on the air as "Race Headquarters?" (T1F01)	PPT Slide 18-27
4. When using tactical identifiers, how often must your station transmit the station's FCC assigned call sign? (T1F02)	PPT Slide 18-29
5. When is an amateur station required to transmit its assigned call sign? (T1F03)	PPT Slide 18-31

6. Which of the following is an acceptable language for use for station identification when operating in a phone sub-band? (T1F04)	PPT Slide 18-33
7. What method of call sign identification is required for a station transmitting phone signals? (T1F05)	PPT Slide 18-35
8. Which of the following formats of a self-assigned indicator is acceptable when identifying using a phone transmission? (T1F06)	PPT Slide 18-37
9. Which of the following restrictions apply when appending a self-assigned call sign indicator? (T1F07)	PPT Slide 18-39
10. What must an amateur operator do when making on-air transmissions to test equipment or antennas? (T2A06)	PPT Slide 18-41
11. Which of the following is true when making a test transmission? (T2A07)	PPT Slide 18-43
12. Which of the following methods is encouraged by the FCC when identifying your station when using phone? (T2B09)	PPT Slide 18-45

Lesson Topics	
Topic	**Notes**
Third-party communications – discuss	PPT Slide 18-47
• Define third-party communications. “The entity on whose behalf the message is being sent is the third party.”	PPT Slide 18-48
• International third-party communications are restricted to those countries that specifically allow third-party communications with U.S. hams. (T1F11)	PPT Slide 18-49

Progress Check	
Question Stem	**PowerPoint Slide**
To which foreign stations do the FCC rules authorize the transmission of non-emergency third party communications? (T1F11)	PPT Slide 18-50

Demonstrations & Suggested Activities

- Role-play as control operator, third-party, station owner, guest operator and keep every occupied.
- The instructor should pretend to use an autopatch for different purposes and the students decide whether it is legal or not.
- Play back recorded contacts as they are concluded and have students decide whether everyone identified appropriately.
- Have a local Official Observer (OO) visit the class and discuss the OO program and how it operates.

Homework Suggestions to Reinforce Lesson Materials:

- Study lesson material and review test items, pages 8-1 to 8-9, pertaining to Lesson Module 18.
- Read Chapter 8 in *ARRL Ham Radio License Manual* (2nd Edition), pages 8-6 to 8-13 (sections 8.3, 8.5 and 8.6) in preparation for the the next lesson.

Question Pool – Applicable Questions to Chapter 8 – *HRLM*:

Module 18, Chapter 8
T1A05; T1D11; T1E01; T1E02; T1E03; T1E04; T1E05; T1E07; T1E11; T1F01; T1F02; T1F03; T1F04; T1F05; T1F06; T1F07; T1F08; T1F11; T2A06; T2A07; T2B09

Module 19 – Lesson Plan

Operating Regulations:

Interference; Remote and Automatic Stations;

Prohibited Transmissions

Applicable Chapter: Chapter 8
Suggested Lesson Length: 1 Hour
Study & Lesson Materials: • *ARRL Ham Radio License Manual (HRLM)* 2nd Edition, pages 8-6 to 8-8 and 8-10 to 8-13 (sections 8.3, 8.5 and 8.6). • Sample of relevant Question Pool questions. • Laptop computer and projector
Recommended Strategy: • Introduce any other instructors who will join you for this lesson. • Keep in mind that your class will probably consist of people of varying levels of understanding of physical science. Keep your discussion as basic as possible. • From the background information on the students that you collected, see if are there any students in the group with a science/technology background who can aid in instructing this lesson (i.e., teaching assistant). • Progress checks are embedded in the Lesson Topics so that you may periodically assess student learning and mastery of the Question Pool questions. The “stem” of the actual QP question is indicated as a question to pose to the class, as a group. Vary the students that you call upon to answer the questions as you pose them throughout the lesson. You will be able to monitor and measure learning in this manner.

Module Learning Objectives:

At the conclusion of this lesson, students will be able to:

8.3. Discuss regulations concerning, and methods to prevent, interference to and from other stations.
[T1A04; T2B07; T2B08]

8.5. Describe remote and automatic operation of Amateur Radio stations
[T1E06; T1E08; T1E09; T1E10; T1F10]

8.6. List prohibited transmissions
[T1D02; T1D03; T1D04; T1D05; T1D06; T1D07; T1D08; T1D09; T1D10]

Lesson Topics

Topic	Notes
Interference - discuss	
• Explain meaning of QRM and QRN	PPT Slide 19-2
• Define harmful interference – "If a transmission seriously degrades, obstructs or repeatedly interrupts the communications of a regulated service, that is considered harmful interference." (T1A04)	PPT Slide 19-3
• If you get a report of your station being off-frequency or splattering to an adjacent frequency, you must stop transmitting and check it out. (T2B07; T2B08)	PPT Slide 19-4 Administer quiz based on above questions and debrief

Progress Check

Question Stem	PowerPoint Slide
1. Which of the following meets the FCC definition of harmful interference? (T1A04)	PPT Slide 19-5
2. What should you do if you receive a report that your station's transmissions are causing splatter or interference on nearby frequencies? (T2B07)	PPT Slide 19-7

3. What is the proper course of action if your station's transmission unintentionally interferes with another station? (T2B08)	PPT Slide 19-9

Lesson Topics	
Topic	**Notes**
Remote and automatic Operation – discuss and define. • Local control – a control operator is physically present. Any station can be locally controlled. (T1E09) • Remote operation – the control point is located away from the transmitter, but a control operator is present at the control point. Any station can be remotely controlled. (T1E10) • Automatic operation – the station operates completely under the control of devices and procedures that ensure FCC rule compliance. Repeaters, beacons, and space stations can be automatically controlled. (T1E06; T1E08) • Repeater owners are responsible for the proper operation of the repeater. (T1F10)	PPT Slide 19-11 Administer quiz based on above questions and debrief

Progress Check	
Question Stem	**PowerPoint Slide**
1. Under which of the following types of control is it permissible for the control operator to be at a location other than the control point? (T1E06)	PPT Slide 19-12
2. What type of control is being used for a repeater when the control operator is not present at a control point? (T1E08)	PPT Slide 19-14
3. What type of control is being used when transmitting using a handheld radio? (T1E09)	PPT Slide 19-16

4. What type of control is used when the control operator is not at the station location but can indirectly manipulate the operating adjustments of a station? (T1E10)	PPT Slide 19-18
5. Who is accountable should a repeater inadvertently retransmit communications that violate the FCC rules? (T1F10)	PPT Slide 19-20

Lesson Topics	
Topic	**Notes**
Prohibited transmissions – discuss and underscore • Prohibited transmissions: o Unidentified transmissions –no call signs offered. o False or deceptive signals – such as using someone else's call sign. o False distress or emergency signals. o Obscene or indecent speech – and avoid controversial topics. (T1D06)	PPT Slide 19-22
• Business communications – commercial activity not permitted. o Advertising radio gear is OK – so long as it's not your regular business. (T1D05) o Teachers may use ham radio as part of their classroom instruction. (T1D08)	PPT Slide 19-23
• Encrypted transmissions – describe. o May not use except for radio control and space station transmission. (T1D03)	PPT Slide 19-24
• Broadcasting and retransmission – discuss and describe. o One-way transmission to general public not permitted. (T1D10) o May not assist in news gathering and transmission. (T1D09)	PPT Slide 19-25

o Music may only be re-broadcast as part of an authorized re-broadcast of the open space shuttle transmission. (T1D04) o Repeaters, auxiliary stations, and space stations are allowed to retransmit signals on different frequencies. (T1D07) o Special circumstances – In general ham may not transmit outside of the amateur radio service – except in dire emergencies. (T1D02)	PPT Slide 19-26 Administer quiz based on above questions and debrief

Progress Check	
Question Stem	**PowerPoint Slide**
1. On which of the following occasions may an FCC-licensed amateur station exchange messages with a U.S. military station? (T1D02)	PPT Slide 19-27
2. When is the transmission of codes or ciphers allowed to hide the meaning of a message transmitted by an amateur station? (T1D03)	PPT Slide 19-29
3. What is the only time an amateur station is authorized to transmit music? (T1D04)	PPT Slide 19-31
4. When may amateur radio operators use their stations to notify other amateurs of the availability of equipment for sale or trade? (T1D05)	PPT Slide 19-33
5. Which of the following types of transmissions are prohibited? (T1D06)	PPT Slide 19-35
6. When is an amateur station authorized to automatically retransmit the radio signals of other amateur stations? (T1D07)	PPT Slide 19-37
7. When may the control operator of an amateur station receive compensation for operating the station? (T1D08)	PPT Slide 19-39

8. Under which of the following circumstances are amateur stations authorized to transmit signals related to broadcasting, program production, or news gathering, assuming no other means available? (T1D09)	PPT Slide 19-41
9. What is the meaning of the term broadcasting in the FCC rules for the amateur services? (T1D10)	PPT Slide 19-43

Demonstrations & Suggested Activities

- Have a local Official Observer (OO) visit the class and discuss OO program and how it operates.

Homework Suggestions to Reinforce Lesson Materials:

- Study of lesson material and review test items pertaining to Lesson Module 19, pages 8-6 to 8-8 and 8-10 to 8-13 (sections 8.3, 8.5 and 8.6)..
- Read Chapter 9 in *ARRL Ham Radio License Manual* (2nd Edition), pages 9-1 to 9-14, in preparation for the next lesson.
- Introduce students to the book, *RF Exposure and You*, by Ed Hare, W1RFI, available through the ARRL Bookstore.

Question Pool – Applicable Questions to Chapter 8 – *HRLM*:

Module 18, Chapter 8
T1A05; T1D11; T1E01; T1E02; T1E03; T1E04; T1E05; T1E07; T1E11; T1F01; T1F02; T1F03; T1F04; T1F05; T1F06; T1F07; T1F08; T1F11; T2A06; T2A07; T2B09

Module 19, Chapter 8
T1A04; T1D02; T1D03; T1D04; T1D05; T1D06; T1D07; T1D08; T1D09; T1D10; T1E06; T1E08; T1E09; T1E10; T1F10; T2B07; T2B08

Module 20 – Lesson Plan

Electrical Safety

Applicable Chapter: Chapter 9
Suggested Lesson Length: ½ Hour
Study & Lesson Materials: • *ARRL Ham Radio License Manual (HRLM)* 2nd Edition, pages 9-1 to 9-5. • Sample of relevant Question Pool questions. • Laptop computer and projector
Recommended Strategy: • Introduce any other instructors who will join you for this lesson. • Keep in mind that your class will probably consist of people of varying levels of understanding of physical science. Keep your discussion as basic as possible. • From the background information on the students that you collected, see if are there any students in the group with a science/technology background who can aid in instructing this lesson (i.e., teaching assistant). • Progress checks are embedded in the Lesson Topics so that you may periodically assess student learning and mastery of the Question Pool questions. The “stem” of the actual QP question is indicated as a question to pose to the class, as a group. Vary the students that you call upon to answer the questions as you pose them throughout the lesson. You will be able to monitor and measure learning in this manner.

Module Learning Objectives: At the conclusion of this lesson, students will be able to: 9.1 Discuss Electrical Safety in the shack. [T0A01; T0A02; T0A03; T0A06; T0A07; T0A11; T0A12; T0A13; T0B10; T0B11]

Lesson Topics	
Topic	**Notes**

Discuss the need for electrical safety in the shack.
• Kinds of electrical injuries possible
  o Effects of current flow on the human body. (T0A02)
  o EMF as low as 30 V can cause injury to the body. (T0A01)
	PPT Slide 20-2

• Avoiding electrical hazards
  o Unplug equipment before working on it.
  o Keep one hand in pocket when working around high voltage circuits even though they are unplugged.
  o Discharge to ground high voltage components before working on them. (T0A12)
  o Install an emergency master on/off switch in shack and make sure family knows how to use it in an emergency.
	PPT Slide 20-3
	PPT Slide 20-4
	PPT Slide 20-5
	
	PPT Slide 20-6

• AC safety grounding – describe what should be in place in the shack (T0A06)
  o Use three-wire power cords that connect the equipment chassis to ac safety ground.
  o Use Ground Fault Circuit Interrupter (GFCI) circuit breaker outlets.
  o Verify that ac wiring has been installed properly. (T0A03)
  o Never replace a fuse or breaker with one larger than circuit rating. (T0A13)
  o Don’t overload circuits.
  o Be careful about RF burns.
	PPT Slide 20-7

• Lightning concerns near the shack.
  o Antennas and towers must be grounded according to local building codes. (T0B11)
  o Ground connections should be as short as possible. (T0A11; T0B10)
	PPT Slide 20-8

o Where coax cables and feed lines enter the house, use lightning arrestors grounded to a common plate. (T0A07) o When lightning is anticipated, it is good practice to disconnect coax from equipment and unplug equipment and power supplies.	Administer quiz based on above questions and debrief

Progress Check	
Question Stem	**PowerPoint Slide**
1. What is a commonly accepted value for the lowest voltage that can cause a dangerous electric shock? (T0A01)	PPT Slide 20-9
2. How does current flowing through the body cause a health hazard? (T0A02)	PPT Slide 20-11
3. What is connected to the green wire in a three-wire electrical AC plug? (T0A03)	PPT Slide 20-13
4. What is a good way to guard against electrical shock at your station? (T0A06)	PPT Slide 20-15
5. Which of these precautions should be taken when installing devices for lightning protection in a coaxial cable feed line? (T0A07)	PPT Slide 20-17
6. Which of the following is good practice when installing ground wires on a tower for lightning protection? (T0A11)	PPT Slide 20-19
7. What kind of hazard might exist in a power supply when it is turned off and disconnected? (T0A12)	PPT Slide 20-21
8. What safety equipment should always be included in home-built equipment that is powered by 120V AC power circuits? (T0A13)	PPT Slide 20-23

9. Which of the following is true concerning grounding conductors used for lightning protection? (T0B10)	PPT Slide 20-25
10. Which of the following establishes grounding requirements for an amateur radio tower or antenna? (T0B11)	PPT Slide 20-27

Homework Suggestions to Reinforce Lesson Materials:

- Study lesson material and review test items pertaining to Module 20, pp 9-1 to 9-5.
- Read Chapter 9 in *ARRL Ham Radio License Manual* (2nd Edition), pages 9-5 to 9-10 in preparation for next lesson.

Question Pool – Applicable Questions to Chapter 9 – *HRLM*:

Module 20, Chapter 9
T0A01; T0A02; T0A03; T0A06; T0A07; T0A11; T0A12; T0A13; T0B10; T0B11

Module 21 – Lesson Plan

Radio Frequency Exposure

Applicable Chapter: Chapter 9
Suggested Lesson Length: ¾ Hour
Study & Lesson Materials: • *ARRL Ham Radio License Manual (HRLM)* 2nd Edition, pages 9-5 to 9-10. • Sample of relevant Question Pool questions. • Laptop computer and projector • ARRL's *RF Exposure and You* publication
Recommended Strategy: • Introduce any other instructors who will join you for this lesson. • Keep in mind that your class will probably consist of people of varying levels of understanding of physical science. Keep your discussion as basic as possible. • From the background information on the students that you collected, see if are there any students in the group with a science/technology background who can aid in instructing this lesson (i.e., teaching assistant). • Progress checks are embedded in the Lesson Topics so that you may periodically assess student learning and mastery of the Question Pool questions. The "stem" of the actual QP question is indicated as a question to pose to the class, as a group. Vary the students that you call upon to answer the questions as you pose them throughout the lesson. You will be able to monitor and measure learning in this manner.

Module Learning Objectives: At the conclusion of this lesson, students will be able to: 9.2 Discuss issues of RF exposure in the shack. [T0C01**;** T0C02; T0C03; T0C04; T0C05; T0C06; T0C07; T0C08; T0C09; T0C10; T0C11]

Lesson Topics	
Topic	**Notes**
Discuss RF exposure and the inherent dangers and recent concerns	PPT Slide 21-2
• No link between EMR and health issues, but it is prudent to avoid unnecessary exposure.	Display *ARRL's RF Exposure and You* publication.
• At low frequencies, RF energy is non-ionizing radiation. (T0C01)	
• Define –the intensity of an RF field is called power density.	PPT Slide 21-3
• Safe exposure levels have been established by the FCC.	
• Discuss controlled versus uncontrolled environments.	PPT Slide 21-4
• RF absorption varies with frequency because the body absorbs more RF energy at some frequencies than others. (T0C05)	PPT Slide 21-5
• Maximum Permissible Exposure (MPE) is lowest at 50 MHz and highest at 3.5 MHz (T0C02)	PPT Slide 21-6
• Duty cycle is one of the factors used to determine safe RF radiation exposure levels because it affects the average exposure of people to radiation. (T0C10)	PPT Slide 21-7
• Duty cycle is the ratio of on-air time to total operating time of a transmitted signal. (T0C11)	
• Acceptable methods to determine station RF exposure compliance with FCC rules includes calculations based on FCC OET Bulletin 65, calculation based on computer modeling, or by measurement of field strength using calibrated equipment. (T0C06)	PPT Slide 21-8
• Factors that affect RF exposure of people include proximity to the antenna, frequency and power level, and antenna radiation pattern. (T0C04)	
• The maximum RF power that a station on a VHF frequency can use is 50 W before exposure evaluation is required. (T0C03)	

• You must re-evaluate your compliance whenever you change station equipment. (T0C09) • Relocation of an antenna is one measure that an amateur might take to limit excessive exposure. (T0C08) • Emphasize that RF burns can be eliminated by preventing access to the antenna. (T0C07)	Administer quiz based on above questions and debrief

Progress Check	
Question Stem	**PowerPoint Slide**
1. What type of radiation are VHF and UHF signals? (T0C01)	PPT Slide 21-9
2. Which of the following frequencies has the lowest Maximum Permissible Exposure limit? (T0C02)	PPT Slide 21-11
3. What is the maximum power level that an amateur radio station may use at VHF frequencies before an RF exposure evaluation is required? (T0C03)	PPT Slide 21-13
4. What factors affect the RF exposure of people near an amateur radio antenna? (T0C04)	PPT Slide 21-15
5. Why do exposure limits vary with frequency? (T0C05)	PPT Slide 21-17
6. Which of the following is an acceptable method to determine that your station complies with FCC RF exposure regulations? (T0C06)	PPT Slide 21-19
7. What could happen if a person accidently touched your antenna while you were transmitting? (T0C07)	PPT Slide 21-21
8. Which of the following actions might amateur operators take to prevent exposure to RF radiation in excess of FCC-supplied limits? (T0C08)	PPT Slide 21-23

9. How can you make sure your station stays in compliance with RF safety regulations? (T0C09)	PPT Slide 21-25
10. Why is duty cycle one of the factors used to determine safe RF radiation exposure levels? (T0C10)	PPT Slide 21-27
11. What is meant by “duty cycle” when referring to RF exposure? (T0C11)	PPT Slide 21-29

Demonstrations & Suggested Activities

- A tour of a shack is desirable. If your club has a shack, provide students with a safety tour and orientation. If not, perhaps mentor club members can take their students on individual tours of member shacks.

Homework Suggestions to Reinforce Lesson Materials:

- Study lesson material and review test items pertaining to Module 21, pp 9-5 to 9-10.
- Read Chapter 9 in *ARRL Ham Radio License Manual* (2nd Edition), pages 9-11 to 9-14 in preparation for next lesson.

Question Pool – Applicable Questions to Chapter 9 – *HRLM*:

Module 20, Chapter 9
T0A01; T0A02; T0A03; T0A06; T0A07; T0A11; T0A12; T0A13; T0B10; T0B11

Module 21, Chapter 9
T0C01; T0C02; T0C03; T0C04; T0C05; T0C06; T0C07; T0C08; T0C09; T0C10; T0C11

Module 22 – Lesson Plan

Mechanical Safety

Applicable Chapter: Chapter 9
Suggested Lesson Length: 1 Hour
Study & Lesson Materials: • *ARRL Ham Radio License Manual (HRLM)* 2nd Edition, pages 9-11 to 9-14. • Sample of relevant Question Pool questions. • Laptop computer and projector • *Antenna Towers for Radio Amateurs* by Don Daso, K4ZA
Recommended Strategy: • Introduce any other instructors who will join you for this lesson. • Keep in mind that your class will probably consist of people of varying levels of understanding of physical science. Keep your discussion as basic as possible. • From the background information on the students that you collected, see if are there any students in the group with a science/technology background who can aid in instructing this lesson (i.e., teaching assistant). • Progress checks are embedded in the Lesson Topics so that you may periodically assess student learning and mastery of the Question Pool questions. The “stem” of the actual QP question is indicated as a question to pose to the class, as a group. Vary the students that you call upon to answer the questions as you pose them throughout the lesson. You will be able to monitor and measure learning in this manner.

Module Learning Objectives:

At the conclusion of this lesson, students will be able to:

9.3 Discuss mechanical safety in the shack and on the antenna farm.
[T0B01; T0B02; T0B03; T0B04; T0B05; T0B06; T0B07; T0B08; T0B09]

Lesson Topics	
Topic	**Notes**
Discuss mechanical safety in the shack and on the antenna farm.	
• Discuss mobile installations and the need to secure equipment well in a moving vehicle. o "Hands-free" microphones needed in some jurisdictions. o Don't forget motor vehicle driving safety.	PPT Slide 22-2
• Discuss putting up antennas and supports o First, check out utility and power lines coming near the house. Stay clear of such power lines. (T0B04) o There must be a minimum of 10 feet of clearance during a fall of an antenna from a power line is a must. (T0B06) o Never attach an antenna or guy wire to a utility pole since a mechanical failure could result in contact with high-voltage. (T0B09) o Towers should be grounded with separate 8 ft. long ground rods for each tower leg, bonded to the tower and each other. (T0B08)	PPT Slide 22-3
• Discuss tower and climbing safety o Dress appropriately: boots, gloves, hard hat. (T0B01) o When climbing, use a proper harness and safety glasses. (T0B02) o Never climb a crank-up tower supported only by its support cable. (T0B07) o Use a gin pole to hoist antennas and tower sections. (T0B05) o Have a ground crew monitoring your efforts; never climb alone. (T0B03)	PPT Slide 22-4 Administer quiz based on above questions and debrief

Progress Check	
Question Stem	**PowerPoint Slide**
1. When should members of a tower work team wear a hard hat and safety glasses? (T0B01)	PPT Slide 22-5
2. What is a good precaution to observe before climbing an antenna tower? (T0B02)	PPT Slide 22-7
3 Under what circumstances is it safe to climb a tower without a helper or observer? (T0B03)	PPT Slide 22-9
4. Which of the following is an important safety precaution to observe when putting up an antenna tower? (T0B04)	PPT Slide 22-11
5. What is the purpose of a gin pole? (T0B05)	PPT Slide 22-13
6. What is the minimum safe distance from a power line to allow when installing an antenna? (T0B06)	PPT Slide 22-15
7. Which of the following is an important safety rule to remember when using a crank-up tower? (T0B07)	PPT Slide 22-17
8. What is considered to be a proper grounding method for a tower? (T0B08)	PPT Slide 22-19
9. Why should you avoid attaching an antenna to a utility pole? (T0B09)	PPT Slide 22-21

Demonstrations & Suggested Activities

- A tour of a shack is desirable. If your club has a shack, provide students with a safety tour and orientation. If not, perhaps mentor club members can take their students on individual tours of member shacks.

Homework Suggestions to Reinforce Lesson Materials:

- Study lesson material and review test items pertaining to Module 22, *ARRL Ham Radio License Manual*, pages 9-11 to 9-14.
- Introduce student to the book *Antenna Towers for Radio Amateurs* by Don Daso, K4ZA, available through the ARRL Bookstore.

Question Pool – Applicable Questions to Chapter 9 – *HRLM*:

Module 20, Chapter 9
T0A01; T0A02; T0A03; T0A06; T0A07; T0A11; T0A12; T0A13; T0B10; T0B11

Module 21, Chapter 9
T0C01; T0C02; T0C03; T0C04; T0C05; T0C06; T0C07; T0C08; T0C09; T0C10; T0C11

Module 22, Chapter 9
T0B01; T0B02; T0B03; T0B04; T0B05; T0B06; T0B07; T0B08; T0B09